# AURORA®

## Wind Inverters

# INSTALLATION AND OPERATOR'S MANUAL



*Model number: PVI-3.0/3.6/4.2-OUTD-US-W* *Rev. 2.0*

**REVISION TABLE**

| Document Revision | Date | Change Description |
|---|---|---|
| 1.0 | 16-Feb-09 | New release |
| 2.0 | 17-Mar-09 | Certificate of Compliance added |

# SAVE THESE INSTRUCTIONS!

# IMPORTANT SAFETY INSTRUCTIONS

## IMPORTANT SAFETY INSTRUCTIONS

This manual contains important safety instructions that must be followed during the installation and startup of the equipment. To reduce the risk of electrical shock hazards and to ensure the equipment is safely installed prior to operation, special safety symbols are used in this manual to highlight potential safety hazards and provide important safety information. The symbols are:

**WARNING**: The paragraphs highlighted by this symbol contain processes and instructions that must be followed to avoid potential injury to personnel and equipment damage..

**NOTE**: The paragraphs highlighted by this symbol contain processes and instructions that must be followed to avoid potential equipment damage or negative results.

- The equipment is provided with several labels. Labels with a yellow background are related to safety issues.
- Read the labels and ensure that you understand them before performing equipment installation.
- The labels utilize the following symbols:

| | |
|---|---|
| ⏚ | Equipment grounding conductor (Main grounding protective earth, PE) |
| ~ | Alternating Current (AC) value |
| ⎓ | Direct Current (DC) value |
| ∅ | Phase |
| ⏚ | Grounding (Earth) |

## USEFUL INFORMATION AND SAFETY STANDARDS

### FOREWORD

- Installation of the Aurora inverter must be performed in full compliance with national and local standards and regulations.
- The Aurora inverter has no user-serviceable parts. For maintenance or service please contact Power-One Customer Service.
- Read the instructions contained in this manual and become familiar with the safety symbols in the relevant paragraphs before you install and operate the equipment.
- Connection to the distribution grid must be done only after receiving approval from the appropriate local distribution utility as required by national and state interconnection regulations, and must be done only by qualified personnel.
- Disconnect the eolic generator before connect it. This helps prevent any hazardous high voltages from appearing at the connecting cable terminations.

### GENERAL

- During inverter operation, parts may be powered, may lose proper insulation, and may move. In addition, some surfaces may become hot.
- Unauthorized removal of necessary protections, improper use, poor or incorrect installation, or improper operation may lead to serious injury to people and/or equipment damage.
- Transportation, handling, installation, startup, and maintenance must be performed by qualified and trained personnel (all accident prevention rules in force in the user's country must be observed!).
- Basic safety rules require using qualified and trained personnel that have the skills for assembly, startup, and operation of the product to perform such activities.

## ASSEMBLY

- Devices should be assembled and cooled according to the specifications mentioned in their corresponding documents.
- In particular, during transport and handling, parts should not be bent and/or the insulation distances should not be changed. There should be no contact between electronic parts and connection terminals.
- Electrical parts must not be mechanically damaged or destroyed (this could cause potential health risks).

## ELECTRICAL CONNECTION

- Always comply with all prevailing national accident-prevention regulations.
- Electrical connections such as conductor sections, fuses, PE connection, etc., must always be made in accordance with applicable regulations..

## OPERATION

Systems with inverters should be provided with additional control and protective devices in compliance with the corresponding prevailing safety rules, such as those relating to the compliance with technical equipment, accident-prevention regulations, etc.

- Comply with all corresponding marks and symbols present on each device.
- Ensure that all covers and doors are closed during operation.
- Any calibration changes should be made using the operational software.
- Anytime that the inverter has been disconnected from the power grid, powered parts and electrical connections should not be touched as some capacitors could still be charged.

## MAINTENANCE AND SERVICE

Contact Power-One Customer Service for maintenance and service needs.

**SAVE ALL DOCUMENTS IN A SAFE PLACE!**

This document applies only to the PVI-3.0-OUTD-US-W, PVI-3.6-OUTD-US-W, PVI-4.2-OUTD-US-W inverters.


**Fig. 1 - Name Plate for PVI-4.2-OUTD-US-W**

The name plate affixed to the inverter provides the following information:

1) Manufacturing Part Number
2) Model Number
3) Serial Number
4) Week/Year of Manufacture

**CONTENTS**

# 1 FOREWORD

This document contains a technical description of the Aurora Wind Inverter which provides the installer and user with the information required for its installation, operation, and use.

## 1.1 EOLIC ENERGY

Industrialized countries (greater energy consumers) have been experimenting with energy-saving methods and the reduction of pollutant levels for many years thanks to the energy-conversion process. This may be possible through a shrewd and rational consumption of well-known resources, and also by looking for new forms of clean and non-exhaustible energy.

Regenerating sources of energy are fundamental to solve this problem. Under these circumstances, wind energy exploitation to generate electrical (eolic) energy is becoming more and more important worldwide.

Eolic energy, in any case, is of great advantage to the environment because the energy we receive from the windn is transformed directly into electrical energy without any combustion process and without producing any pollution.

# 2 SYSTEM DESCRIPTION

The Aurora inverter feeds a power grid by using the power generated by a wind turbine. The wind turbine (using a generator) converts the mechanical energy from wind into the 3-phase AC voltage. The voltage and frequency of the AC generated by the wind turbine are variable and depend on the wind speed. To be exported to the utility grid the power need to be converted to the frequency and voltage level of the grid. The Aurora inverter does this conversion, also known as DC to AC inversion, very efficiently using just static power electronic devices and without the need of rotating parts.

When used in parallel with the power grid, the alternating current generated by the inverter is directly fed to the domestic distribution circuit, which in turn is also connected to the public power distribution grid. The solar energy system can thus feed all the connected user electrical loads, such as lighting devices, household appliances, etc.

When the wind turbine is not generating sufficient energy, the power required to ensure proper operation of connected user loads is taken from the public power grid. While if the produced energy exceeds load needs, it is directly fed to the grid, thus becoming available to other users' loads.

According to national and local standards and regulations, the user-produced energy can be sold to the grid or credited to the user against future consumption, thus reducing costs and providing what could even be significant savings.

## Available versions

PVI-3.0-OUTD-US-W
PVI-3.6-OUTD-US-W
PVI-4.2-OUTD-US-W

## 2.1 Key elements of a wind energy system: "WIND TURBINE" and "GENERATOR"

Two elements are necessary in order to harvest the wind energy: a wind turbine that will spin based on the wind speed and a generator.
The turbine forces the generator to rotate thus producing energy that can be exported to the grid.
The most common turbine design has a horizontal rotor with 2 or 3 vertical fiberglass blades forming the propeller which may have a fixed or a variable tilt.
The generator is fixed on the rotor. Usually for the small wind system a synchronous permanent magnet generator is used. The current generated by this type of generators has variable voltage and frequency depending on the turbine speed. To be exported to the grid this needs to be is converted to current.
The conversion is done in 2 steps:

A) The 3-phase AC voltage from the generator is filtered and converted to the DC voltage. This conversion can be done inside the turbine or using an interface box between the generator and the inverter.
B) The resulting DC output is connected to the AURORA input and converted into AC power with the appropriate voltage and frequency to be exported to the grid.

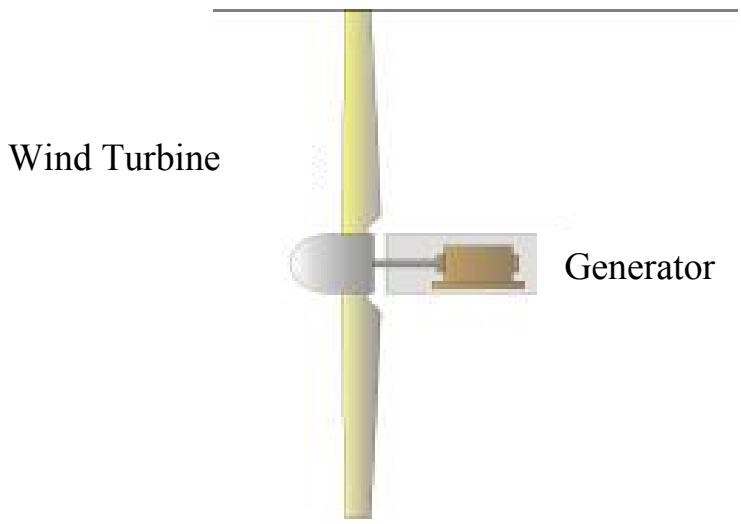


**Fig. 2 - Wind Turbine – Generator**

**WARNING**: The DC voltage input to the inverter shall not exceed 600Vdc for any reason, in order to avoid damage to the equipment.

**NOTE:** A minimum input voltage of 50Vdc is required for the AURORA inverter to start the grid connection sequence. Once connected, the AURORA inverter will transfer the maximum power available for any input DC voltage value in a 50V to 580Vdc range to the grid.

The total current of an input must also be within the capability limits of the inverter. For PVI-4.2 model, the limit is set at 16 Adc maximum for each input, while for PVI-3.0/3.6 models the limit is set at 10 Adc maximum for each input.

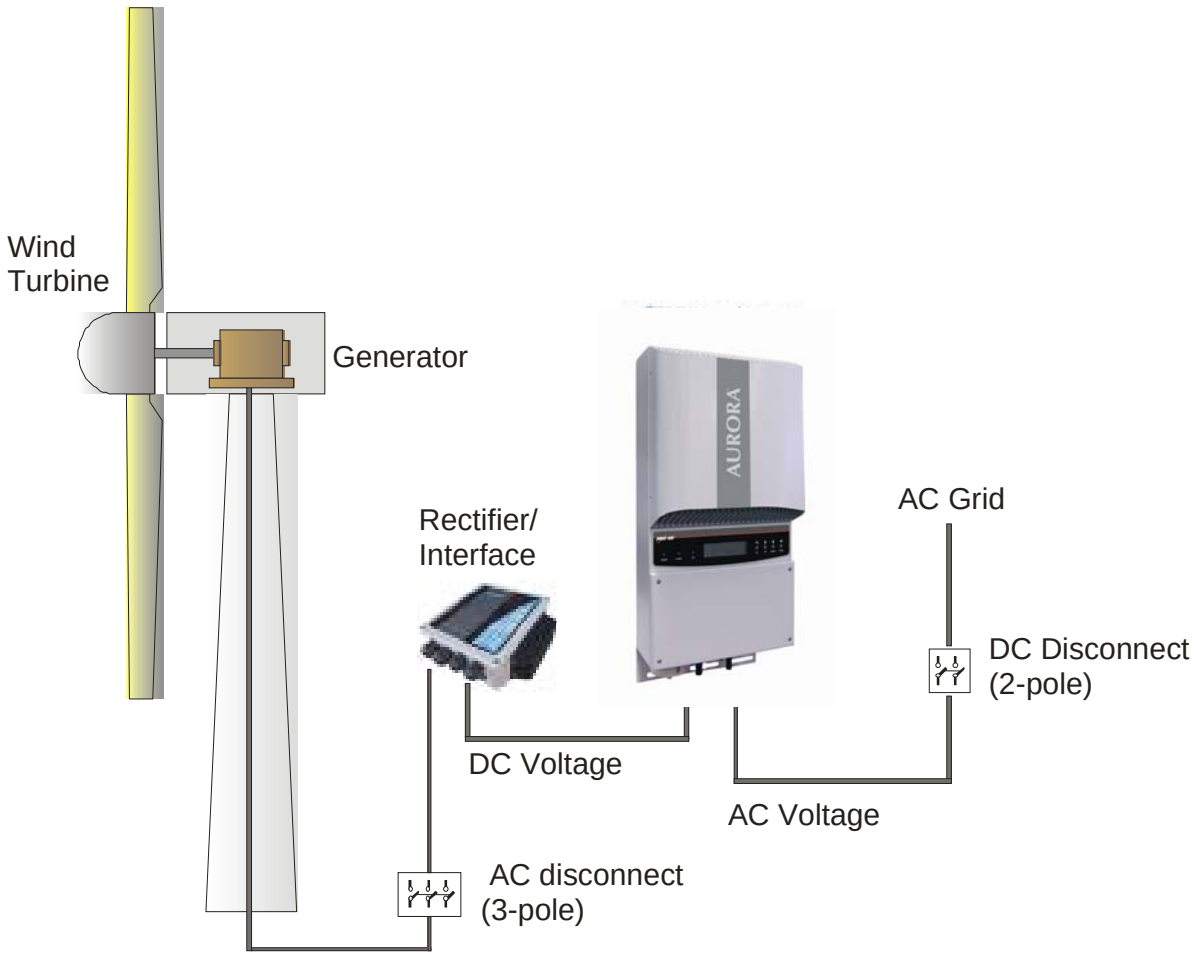


**Fig. 3 - Simplified Diagram of an Eolic System**

## 2.2 Data Transmission and Check

When more than one inverter is used, remote monitoring can be implemented through a sophisticated communication system based on an RS-485 serial interface, with a USB port to facilitate access during installation. An optional Aurora Easy-Control system is also available for remote monitoring via the Internet, analog modem, or GSM digital modem.

## 2.3 Aurora Technical Description

Figure 4 shows a block diagram of the Aurora inverter. The main elements are the input DC-DC converters (termed "boosters") and the output inverter. Both the DC-DC converters and the output inverter operate at a high switching frequency to enable a compact design and relatively low weight.

This is a transformerless version of the Aurora, i.e. without galvanic insulation between input and output, which further increases conversion efficiency. On the other hand, the Aurora inverter is equipped with the necessary protective devices to ensure safe operation in compliance with applicable regulations without an insulation transformer. These protections are discussed in more detail in sections 2.4 through 2.4.3.

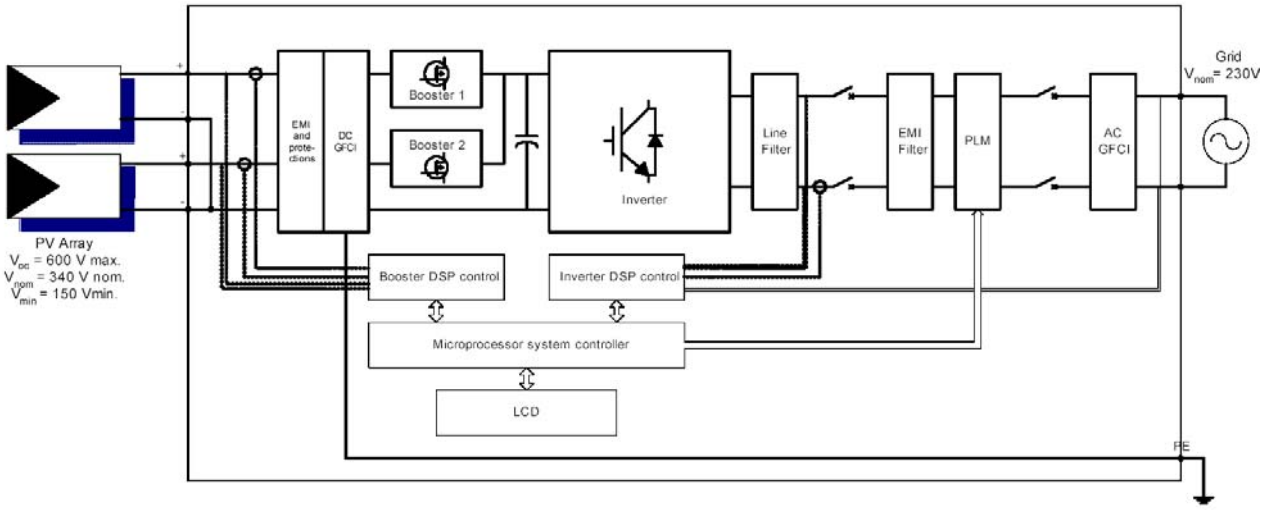


**Fig. 4 - Aurora Inverter Block Diagram**

The block diagram shows an Aurora PVI-3.0/3.6/4.2-OUTD-US-W with two independent input DC-DC converters; in the Wind version the 2 converters are always connected in parallel.

Thanks to its high efficiency and a generously-sized heat sink, the Aurora inverter provides maximum power operation in a broad range of ambient temperatures. The inverter is controlled by two independent Digital Signal Processors (DSPs) and one central microprocessor. This way, grid connection is controlled by two independent computers in full compliance with electrical power supply and safety regulations.

The Aurora inverter operating system communicates with the related parts to proceed to data processing. This process ensures optimal performance levels of the whole units, as well as a high efficiency under all solar radiation and load conditions, while always in full compliance with the applicable directives, standards, and regulations.

## 2.4 Protective Devices

### *2.4.1 Anti-Islanding*

When the local power distribution grid fails due to a fault or when the equipment is shut down for maintenance operations, the Aurora inverter should be physically disconnected under safety conditions, so as to protect any personnel working on the grid, in full compliance with the applicable prevailing national standards and regulations. To avoid any possible islanding operation, the Aurora inverter is provided with an automatic disconnection protective system called Anti-Islanding.

The AURORA PVI-3.0/3.6/4.2-OUTD-US-W models are equipped with a state-of-the-art anti-islanding protection system certified to the following standards and regulations:

- CSA-C22.2 N.107.1-01 UL Std N.1741

### *2.4.2 Gerator Ground Fault*

A sophisticated ground protection circuit continually monitors the ground connection; when it detects a ground fault, this circuit shuts down the inverter and turns on a red LED on the front panel to indicate a ground fault condition. The Aurora inverter is equipped with a terminal for the system grounding conductor; see section 3.3.3 (steps 3 and 4) for more details.

**NOTE:** For more details of Aurora inverter shutdown or possible causes of malfunction, please refer to sections 5.3 and 5.4.

### *2.4.3 Additional Protective Devices*

The Aurora inverter is equipped with additional protections to guarantee safe operation under any circumstances. The protections include:

- constant monitoring of grid voltage to ensure that voltage and frequency remain within the specified operational limits (in accordance with UL 1741 standard).
- automatic power limitation control based on internal temperature monitoring to avoid overheating (heat sink temperature ≤70°C [158°F]).

**Many control devices are fitted to Aurora, making its structure redundant, but at the same time ensuring a perfect and fully safe operation.**

# 3 INSTALLATION

**WARNING**: The electrical installation of the Aurora inverter must be performed in accordance with the electrical standards prescribed by the local regulations and by the National Electric Code (ANSI/NFPA 70 standard).

**WARNING**: The connection of an Aurora inverter to the electrical distribution grid must be performed only after receiving authorization from the utility that operates the grid.

## 3.1 Package Inspection

**NOTE:** The distributor delivered your Aurora inverter to the carrier safely packaged and in perfect condition. Upon acceptance of the package, the carrier assumes responsibility for its safe delivery. In spite of careful handling, transportation damage to the package or its contents is always a possibility.

The customer is encouraged to perform the following checks:

- Inspect the shipping box for apparent damage, such as holes, cracking, or any other sign of possible damage to its contents.
- Describe any damage or shortage on the receiving documents and have the carrier sign his/her full name.
- Open the shipping box and inspect the contents for internal damage. While unpacking, be careful not to discard any equipment, parts, or manuals. If any damage is detected, call the delivering carrier to determine the appropriate action. Save all shipping material in the event that the carrier sends an inspector to verify damage!
- If the inspection reveals damage to the inverter, contact your supplier, or authorized distributor. They will determine if the equipment should be returned for repair. They will also provide instructions on how to get the equipment repaired.
- It is the customer's responsibility to file a claim with the carrier. Failure to file a claim with the carrier may void all warranty service rights for any damage.
- Save the Aurora inverter's original shipping package in the event that you should ever need to return the inverter for repair.

### *3.1.1 Inspecting package contents*

| Description | Quantity (No.) |
|---|---|
| Aurora Inverter | 1 |
| Bag containing:<br>Nr.4 6.3x70 screws, nr.4 SX10 wall plugs, red cable AWG10, black cable AWG10, Torx20 wrench, nr.1 6x10 screw, nr.1 d.18 washer, | 1 |
| Installation and Operator's Manual | 1 |
| Certificate of warranty | 1 |
| CD-ROM with communication software | 1 |

## 3.2 Selecting the installation location

Installation location should be selected based on the following considerations:

- Height from ground level should be such as to ensure that the display and status LEDs are easy to read.
- Select a well-ventilated location sheltered from direct sun radiation. Choose a location that allows unobstructed airflow around the inverter.
- Allow sufficient room around the inverter to enable easy installation and removal from the mounting surface.
- A door is provided on the front of the inverter to allow for hardware maintenance; and the USB port for software connection is on right side wall of the inverter (protected by a cover). Ensure free access to the right side; otherwise you will have to remove the inverter from its mounting surface.

The following figure shows the recommended minimum clearances around the inverter:

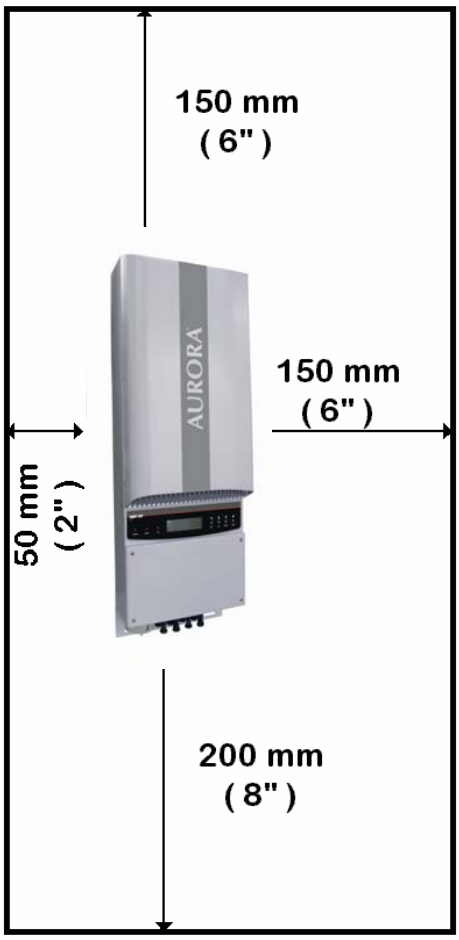


**Fig. 5 - Installation Location - Minimum Clearances around the Aurora Inverter**

**NOTE:** Tilted mounting is permitted (see Fig. 6), but will reduce heat dissipation and may result in self-derating.

**WARNING**: The inverter surface may become hot to the touch during operation. To avoid burn injury, DO NOT touch the inverter surface during operation.

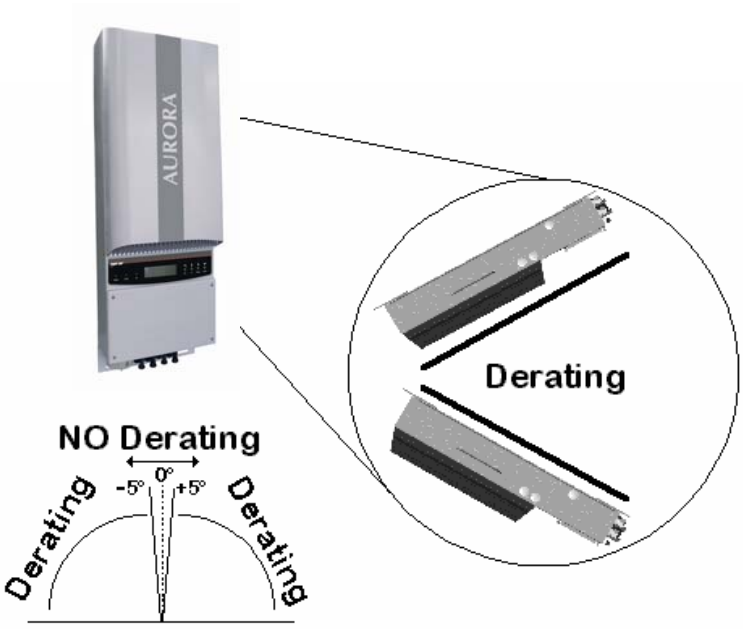


**Fig. 6 - Tilted Mounting**

The Aurora inverter should be mounted vertically as shown in figures.5, 6, 7, and 8. Always follow the relative mounting instructions provided in this section.

Included in the shipping package is a mounting kit with 4 screws and 4 wall plugs provided for mounting the metal bracket to a concrete wall. The screws should be mounted in the 4 holes present in the bracket (shown B in Fig. 8).

If needed to ensure stability of the inverter, you can use 2 additional screws in the 2 holes shown in Fig. 8.

**WARNING**: The bracket needs to be mounted vertically to the wall and the side with the hook should be mounted with the hook pointing upward.

If the installation is done on a concrete wall, the wall plugs provided should be used, and the mounting holes in the wall should have a 10mm diameter and 75mm depth.

When the wall is made of a different material (other than concrete), the installation should be done using adequate mounting material. Power-One recommends always using stainless steel screws.

After the bracket is secured to the wall, install the inverter.

The inverter should be hung onto the bracket using the hooks that need to be well inserted into their counterparts.
The inverter needs to be lifted up and then slid down over the hooks making sure that the connecting points in the bracket and in the back of the inverter engage properly.

After the inverter is hung onto the wall mounting, it needs to be secured using a M6x10 screw and the relative washer that will pass through the opening on the lower side of the inverter (shown as part B in Fig. 7) and into to the PEM fastener of the bracket.


**Fig. 7 - MP-02 – Wall Mounting**

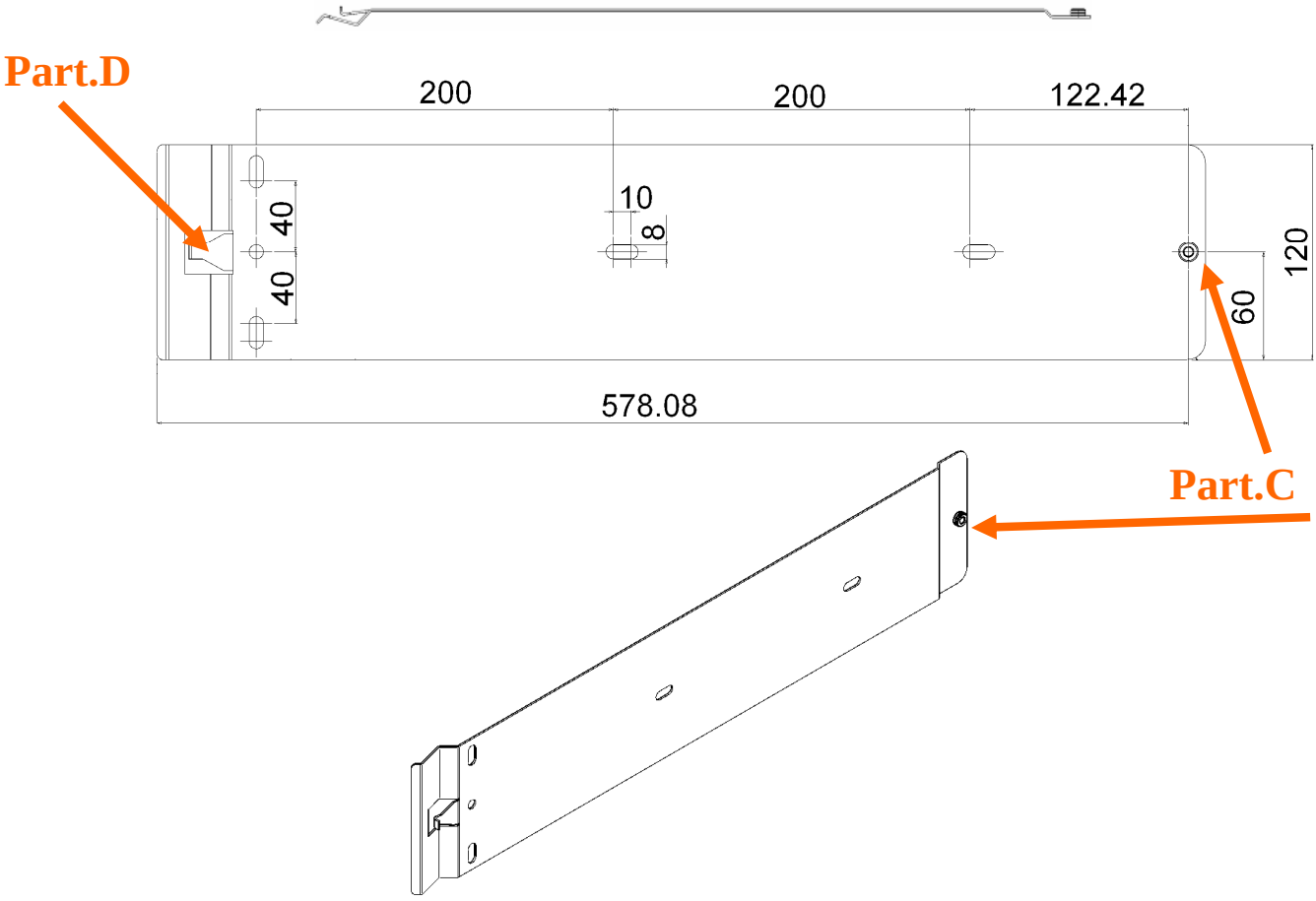


**Fig. 8 - MP-01 –Wall Bracket**

**NOTE**. It is recommended that you DO NOT expose the Aurora inverter to direct sun radiation or any other heat source, including heat generated by other Aurora inverters (see Fig. 6 "recommended installation").

When the ambient temperature rises above 50°C the inverter may self-derate the output power.

- Always make sure that the airflow is not blocked in any installations.

## 3.3 Before Performing the Electrical Connections

**WARNING:** The electrical connections must be connected only after the Aurora inverter is firmly mounted to the wall.

**WARNING**: The connection of the Aurora inverter to the electrical distribution grid must be performed by qualified and trained personnel and only after receiving authorization from the utility that operates the grid.

**WARNING:** For a step-by-step description of the correct procedure, please read - and closely follow - the instructions provided in this section (and its subsections) and all safety warnings. Not complying with the instructions that follow can lead to hazards and possible injury to personnel and/or equipment damage.

**WARNING:** All field wiring connected to signal circuits (WIND, ALARM, REM & RS485) must be UL/CSA certified, rated 600 V or higher, and must be additionally protected by means of a non-metallic conduit. Take care to provide means for securing all the above mentioned wiring away from both AC side and DC side field wiring. Moreover, AC side field wiring should be secured away from DC side field wiring.

**WARNING:** Always respect the nominal ratings of voltage and current defined in section 8 (Technical Features) when designing your system. Please observe these considerations in designing the eolic system:

- Maximum DC voltage input to each input: 600 Vdc under any condition.
- Maximum DC current input to each input: 16Adc under any condition for PVI-4.2 model, 10Adc under any condition for PVI-3.0/3.6 models.

**WARNING:** The electrical installation of the Aurora inverter must be performed in accordance with the electrical standards prescribed by the local regulations and by the National Electric Code (ANSI/NFPA 70 standard).

On the AC output side an automatic magnetothermic switch should be inserted between the Aurora inverter and the distribution grid (see Fig. 9. - Electrical Connection Diagram).

**WARNING**: To reduce the risk of fire, connect only to a circuit provided with 20A maximum branch circuit overcurrent protection in accordance with the National Electric Code (ANSI/NFPA 70).

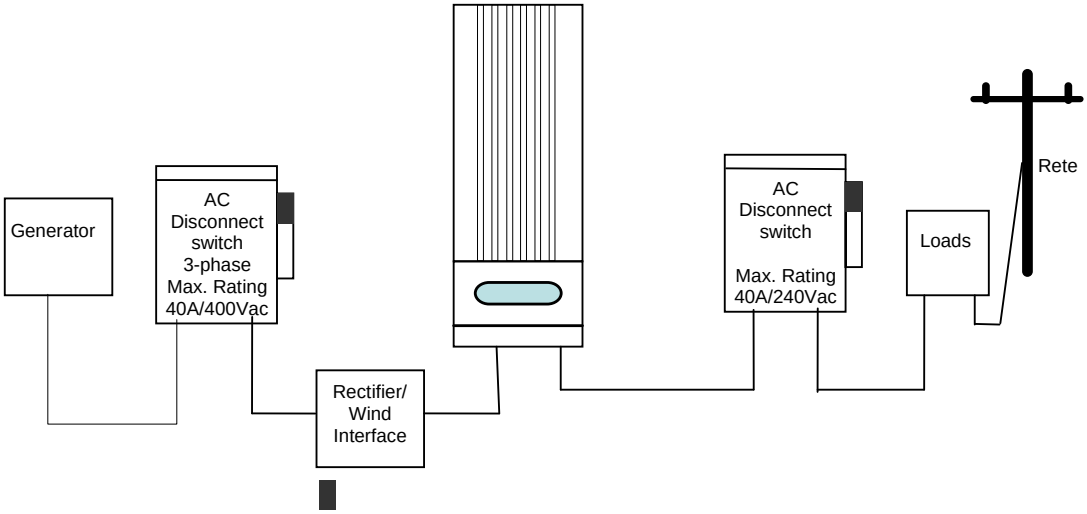


**Fig. 9 - Electrical Connection Diagram**

**WARNING**: Always open the AC disconnect switches to disconnect the Aurora inverter from the Grid and from the generator before unplugging the multiple contact connections from the DC input.

**WARNING**: To avoid the risk of electric shock from energy stored in capacitors, wait 5 minutes after disconnecting both AC and DC sides before opening the front panel.

**WARNING**: A requirement, when selecting the electrical cables, is to carefully evaluate the nominal operating voltage, the insulation rating, the max operating temperature, the current rating, and the flammability rating in accordance with the local safety standards.

When selecting the wire for the installation, the correct size needs to be selected in order to avoid efficiency loses. Refer to Table CN-01 (section 3.3.3) "AC Grid Connections" to select the cable size.

The following items are located on the bottom of the inverter (see Fig. 10, from right to left):

- Two holes sealed with waterproof caps. Remove the caps to gain access to the connectors for data serial transfer via the RS485 port. One hole is for the input serial cable and the other for an output cable, if fitted (output cable is required when several inverters are connected in a daisy-chain configuration, see Section 6).
- Cable gland for AC grid connection
- Cable gland for DC connection to the rectifier.

**Fig. 10 - Connectors on the bottom of the inverter**

**WARNING:** When making the electrical connections follow the procedure exactly to avoid exposure to dangerous voltages. Each step of the procedure is explained in the following paragraphs. To disconnect the AURORA inverter, perform steps 1/6 and 2/6 and then disconnect the AC and DC connectors.

- The wind turbine need to be blocked with a mechanical brake prior to be connected to the AURORA inverter to make sure that there is no voltage on the cable that can result in a safety hazard.

### *3.3.1 Removing the Front Cover and Accessing the Internal Terminal Block.*

**WARNING**: Before performing the procedures described below, ALWAYS follow the section 3.3 "Before performing the electrical connection".

To remove the front cover, loosen the 4 screws shown in fig 11, using the flathead screwdriver provided in the box with the inverter.


**Fig.11 - Aurora Inverter with Front Panel.**

When the connection operations are completed, reinstall the front cover and tighten the 4 screws into the cover with at least 1.5Nm (13.2 in-lbs) torque to ensure proper waterproof sealing.

### *3.3.2 AURORA Inverter Typical Electrical Installations.*

**WARNING**: THE INPUT CURRENT shall not exceed 16Adc for each input channel (PVI-4.2) or 10Adc (PVI3.0/3.6)

**WARNING:** Before performing the procedures described below, ALWAYS follow the section 3.3 "Before performing the electrical connection".

**Step 1:** Disconnect from the AC Grid by turning Off the Grid "AC Bipolar Switch" – shown in Fig. 9 "Electrical Connection Diagram". Disconnect from the eolic generator by turning Off the Generator "AC Bipolar Switch" – shown in Fig. 9 "Electrical Connection Diagram"

**Step 2:** Remove the Inverter cover (4 screws of fig. 11) and connect the DC cable to the input terminal block. Refer to …….

**Step 3:** Connect the AC cable by following the instructions in section 3.3.3, "Connection to the AC Grid".

**Step 4:** Reconnect the AC switches and wait until the wind comes up.

**WARNING**: Verify that the DC voltage in the Inverter input has the correct polarity and is within the operational range.

If the parameters are within the operating range defined in the specification, close and secure the inverter cover and follow the instructions in section 4, "START-UP".

**WARNING**: Before performing the following instructions, ALWAYS follow the section 3.3 "Before performing the electrical connection".

### *3.3.3 Connection to the AC GRID*

**WARNING**: Before performing the following instructions, ALWAYS follow the section 3.3 "Before performing the electrical connection".

Step 1: Remove the Inverter front panel (remove the 4 screws in Fig. 11).

Step 2: Lay down the cable between the Aurora inverter and the AC disconnect switch.

Step 3: Pass the AC cable inside Aurora through one of the cable glands present in the lower side of the Inverter (see Fig. 10)

Steps 4: Connect the 3 AC wires to the relative terminal block present inside the inverter. The AC wire connections should be done as reported in the Table CN-01 – "AC Grid Connections":


**Fig.12 - AC wire terminal block**

Based on the local GRID standards, it is possible to select different connection types. The available configurations are shown in the following table (Table CN-01 – "AC Grid Connections").

| GRID STANDARD | 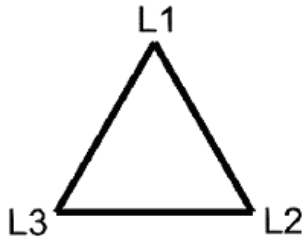 | | |  | | | 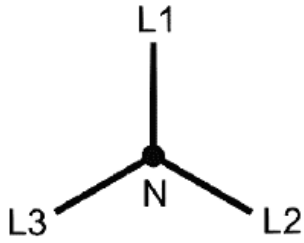 | | |
|---|---|---|---|---|---|---|---|---|---|
| | **208V~** 3PH - Δ | | | **240V~** SPLIT-PHASE | | | **277V~** 3PH - Y | | |
| TERMINAL | 1 | 2 | 3 | 1 | 2 | 3 | 1 | 2 | 3 |
| WIRE | L1(*) | L2(*) | - | L1 | L2 | N | N | L 1(*) | - |
| AWG # | 4 - 8 | | | | | | | | |

**Table CN-01 – AC Grid Connections**

**WARNING:** The eolic generator grounding shall be installed per the requirements of sections 690.41 through 690.47 of the NEC, ANSI/NFPA 70 and it is responsibility of the installer.

**WARNING:** In order to thighten correctly the screw terminal of the inverter apply the AWG size, temperature and torque listed in the following table.

| Models PVI-4.2(3.6, 3.0)-OUTD-US-W | Wire Size | Temp | Torque | |
|---|---|---|---|---|
| | AWG | C | Nm | In-lbs |
| AC and GND field wiring terminals | 6-8 | 90 | 1.69 | 15 |
| DC field wiring terminals | 6-8 | 90 | 1.69 | 15 |
| Grounding Electrode | 4-8 | 90 | 5.08 | 45 |

### *3.3.4 Connection to the DC side*

**WARNING**: Before performing the following instructions, ALWAYS follow the section 3.3 "Before performing the electrical connection".

**WARNING:** Prior to connecting the AURORA inverter to the rectifier check, using a proper meter, that the polarity and the voltage value between the positive and negative terminal are correct. The output voltage polarity from the rectifier should match the "+" and "-" symbols.

Use the following procedure:

1) Verify the presence of the two wires connecting the two DC input channels in parallel (the inverter is shipped from the factory with the two wires already connected).
2) Connect the positive DC cable from the rectifier or Wind Interface to the positive terminal block inside the AURORA inverter (red cable on Fig 13).
3) Connect the negative DC cable from the rectifier or Wind Interface to the negative terminal block inside the AURORA inverter (black cable on Fig 13).

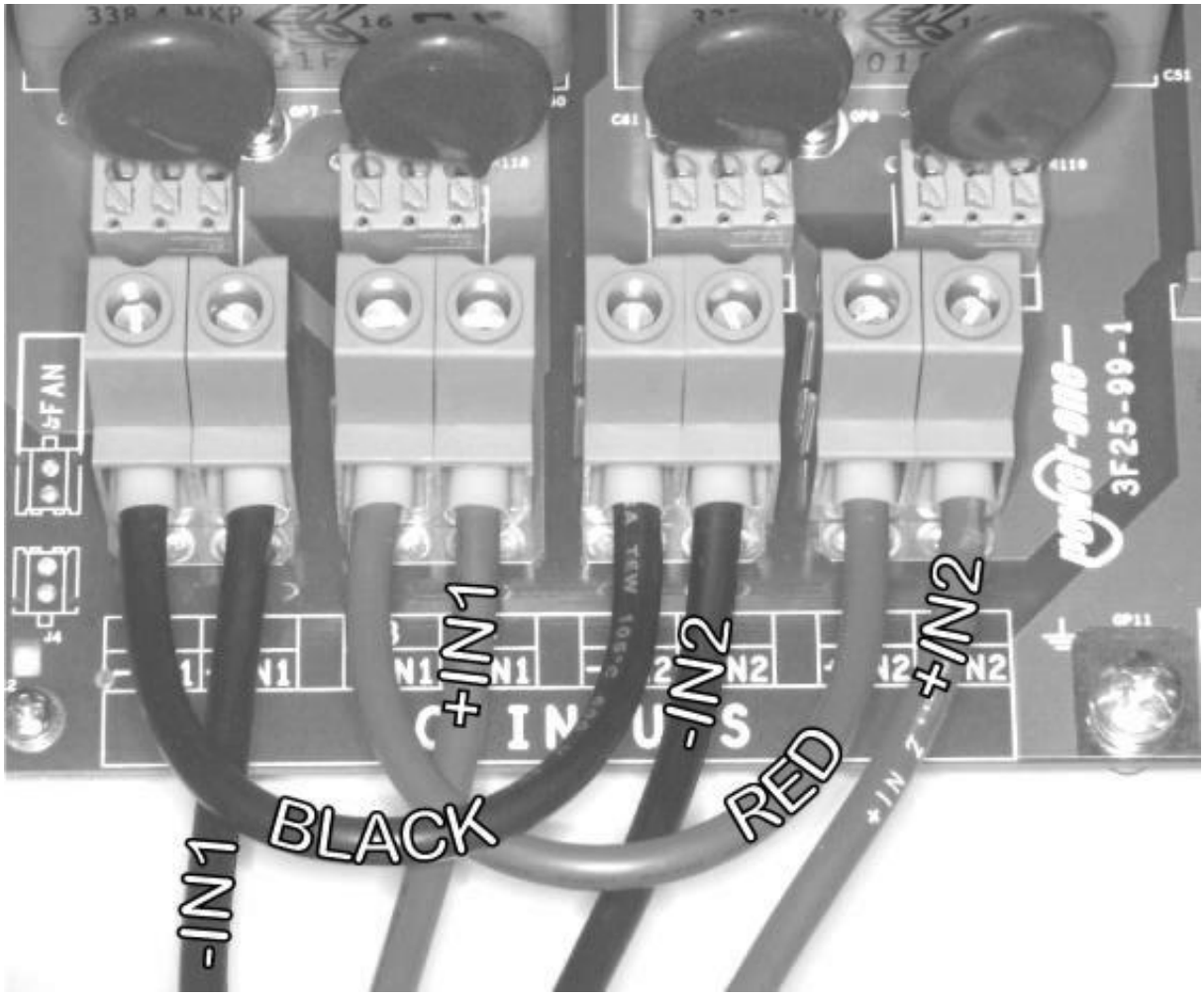


**Fig.13 DC wire terminal block**

### *3.3.5 Connection of RS485, wind speed and Alarm contact*

**WARNING:** Before performing the following instructions, ALWAYS follow the section 3.3 "Before performing the electrical connection".

Step 1: Remove the cover of the Aurora inverter (Ref. Fig. 11) in order to gain access to the terminal block board.

Step 2: Lay down the cables between the Aurora inverter and the outside passing trough the provided holes and cable glands.

Step 2: Connect the communication and the alarm cables to the communication and alarm terminal block on the right side of the inverter. Follow the marking on the terminal block for appropriate connection.

**WARNING**: In order to separate correctly power cable from signal cables make sure to use the provided cable ties on the inverter. See fig. 15 appropriate cabling.

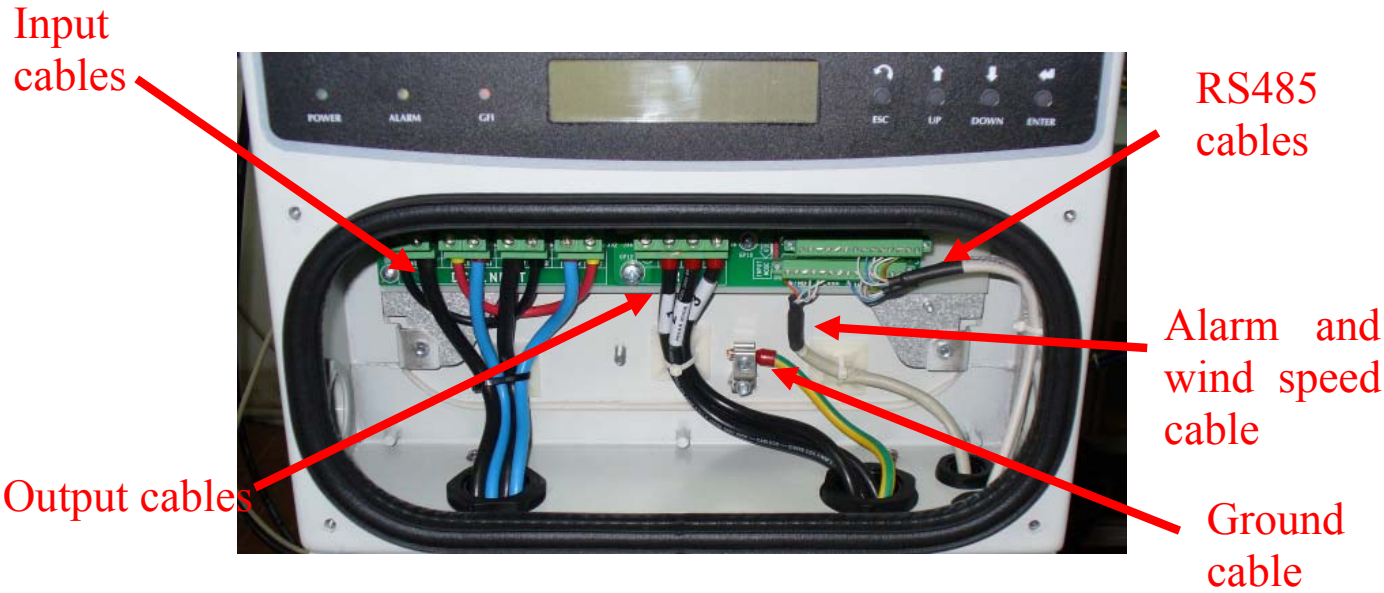


**Fig.15 – Complete cabling, particular.**

**WARNING**: All the screws on the electrical input/output terminal block of the inverter should be tightened using 13 in/lbs torque.

## 3.4 CR2032 Lithium Battery Replacement

**WARNING**: Before performing the following instructions, ALWAYS follow the section 3.3 "Before performing the electrical connection".

Inside the Aurora inverter there is a CR2032 lithium battery. When this battery is at end-of-life, a message will be shown in the display informing that the battery needs to be replaced.

The battery is visible after removing the Aurora inverter's front panel. Refer to fig. 11 for the procedures to remove the front panel.

To insert the new battery into the battery holder the battery needs to be slid at a 30° angle as shown in Fig 16, and when pushed in on insertion it should seat into the correct position within the holder.

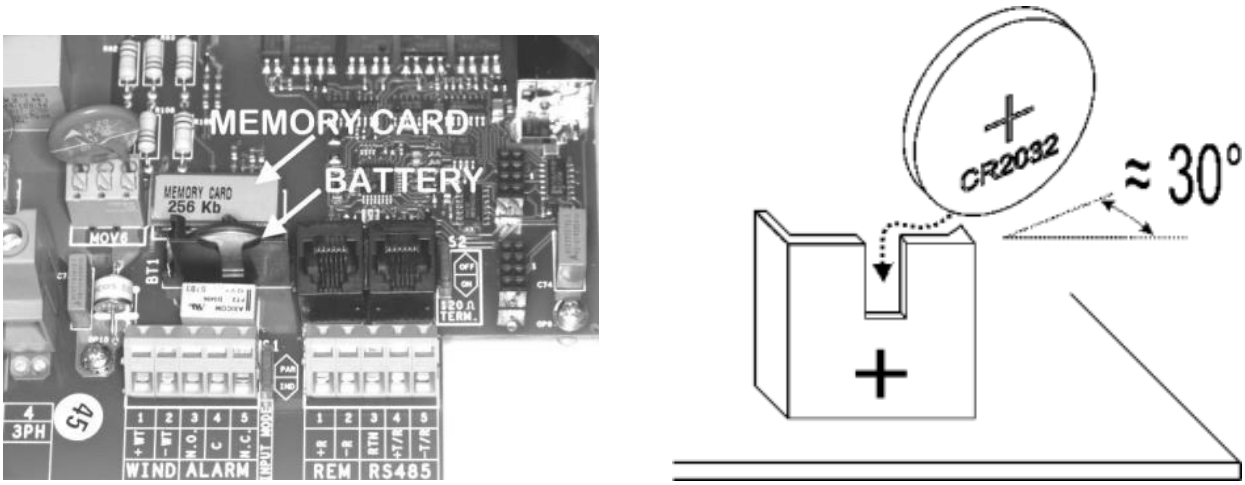


**Fig.16 - Lithium Battery Replacement**

**WARNING**: The replacement of this battery should be performed only by trained personnel.

After battery replacement is completed, reinstall and secure the front panel of the inverter and perform the START-UP procedure in section 4.

# 4 START-UP

**WARNING**: Do not place any items on the Aurora inverter during operation.

**WARNING**: Do not touch the heat sink when the inverter is operating, as some parts may be hot and cause burns.

The start-up procedure is as follows:

1) Set the generator AC disconnect to ON

2) Set the external AC disconnect (for the grid) to ON.
There is no specific order for closing the two disconnects.

**WARNING**: This operation starts the connecting procedure for inverters. Do not open the inverter

3) Once both disconnects are closed, the inverter starts the grid connection sequence, unless the grid voltage and frequency parameters are found to be outside the operating range as per the UL 1741 standard. The check routine is indicated by the flashing green LED labelled POWER over the display.
The check routine may take from 30 seconds up to several minutes, depending on grid condition. Three screens are shown on the display during the check routing:

- "Measuring Riso…", connection in progress with progress indication (Riso = insulating resistance)
- Grid voltage value and status compared to specified values (within/outside range).
- Grid frequency value and status compared to specified values (within/outside range).

4) When the connection sequence is completed, the Aurora inverter starts operating; proper operation is indicated by a warning sound and the green LED staying on steady. This means that wind speed is sufficient to feed the grid.
5) If the grid check routine gives a negative result, the unit will repeat the procedure until all grid voltage and frequency parameters and grid configuration are found to be within the specified range. During this process, the green LED will keep flashing.

# 5 MONITORING AND DATA TRANSMISSION

## 5.1 User's Interface Mode

**WARNING**: The RS-485 cable must provide at least 600V protection.

**WARNING**: The RS-485 cable must be UL/CSA certified wiring and must be additionally protected by means of a non-metallic conduit.

Normally, the Aurora inverter operates automatically and needs no particular supervision. When solar radiation is not enough to generate power for the grid (for instance, at night), the Aurora disconnects automatically and goes into standby mode.

The operating cycle is resumed automatically the moment when solar radiation becomes strong enough. This is indicated by the LEDs.

The Aurora inverter provides operational data in the following ways:

- LED indicators
- Operational data on the LCD display
- Data transmission on a dedicated serial RS-485 line. Data can be collected by a PC or a data logger equipped with an RS-485 port. If an RS-485 line is used, it may be convenient to use the Aurora RS-485/RS232 Serial Interface Converter model number PVI-RS232485. An optional Aurora Easy Control data logger is also available.
- Data transmission via USB cable. This type of connection is typically used when monitoring a single inverter and for maintenance purposes. To connect the USB cable, remove the waterproof plug at the bottom end of the inverter right wall (see Fig.17).

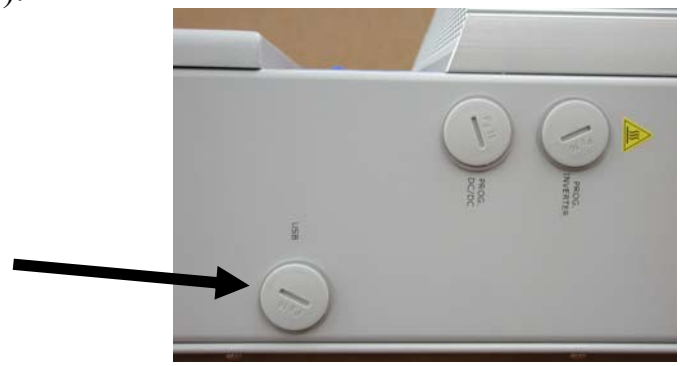


**Fig.17 - USB Port**

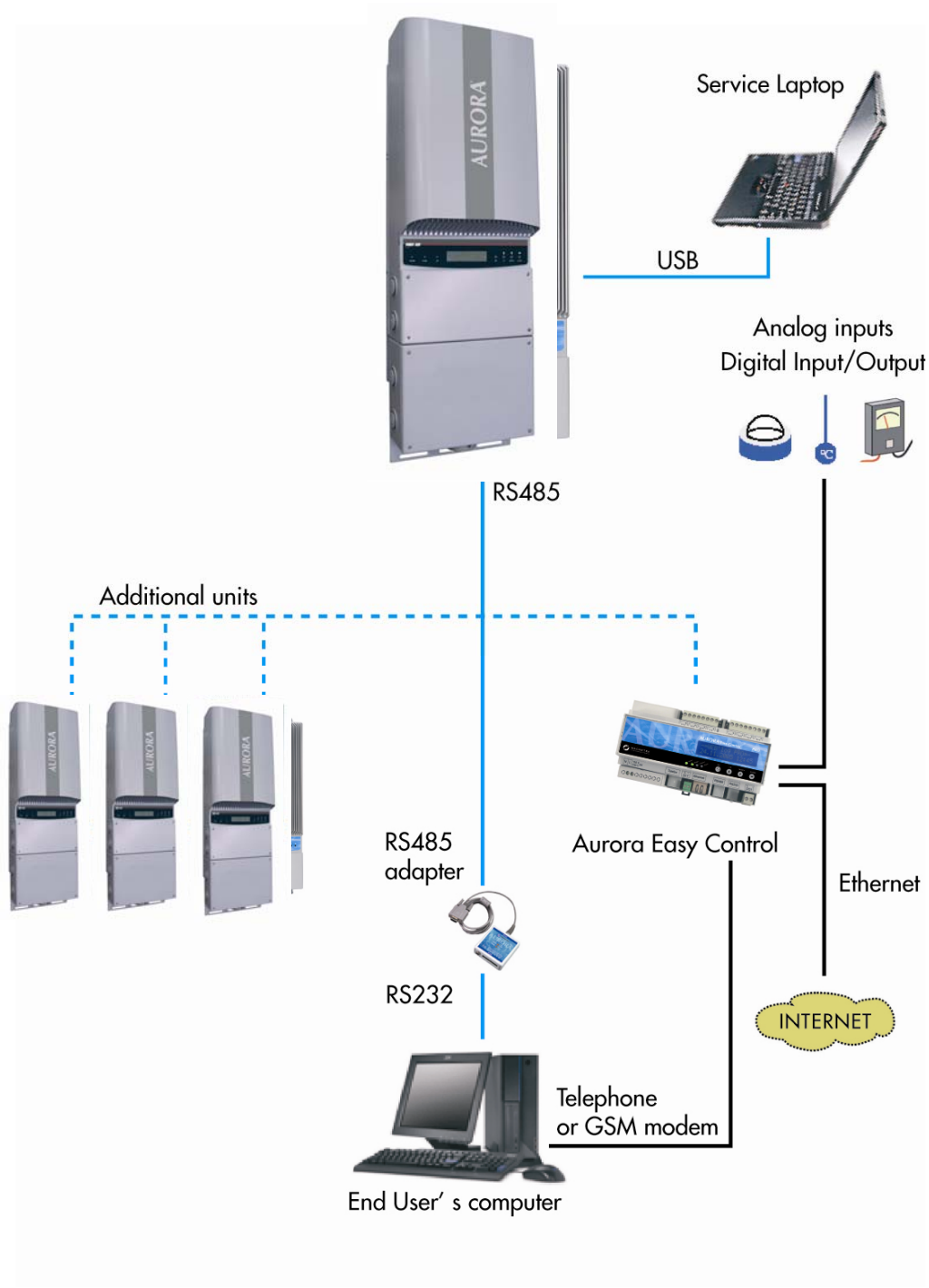


**Fig. 18 - Data Transmission Options**

## 5.2 Available Data

The Aurora inverter provides two types of data that can be collected using the Aurora Communicator interface software.

### *5.2.1 Real-time operational data*

Real-time operational data can be transmitted on demand through the communication lines and are not stored by the inverter. The Aurora Communicator software (available on the installation CD) may be used to transmit data to a PC. Please check for the latest updated version at www.power-one.com).

The following data is available:

- Grid voltage
- Grid current
- Grid frequency
- Power transferred to the grid
- Input voltage
- Input current
- Heat sink temperature
- Serial number / Part number
- Manufacturing week
- Firmware revision code
- Daily energy
- Leakage current of the system
- Total energy
- Partial energy
- Mean grid voltage
- Insulation resistance
- Leakage current to ground
- Date, time

### *5.2.2 Internally logged data*

Aurora stores internally the following data:

- Lifetime counter of grid connection time
- Lifetime counter of energy transferred to the grid
- Energy transferred to the grid every 10 seconds for the last 8640 periods of 10 seconds (which on average cover more than 2 days logged data)
- Partial counter of grid connection time (counter start time can be reset using the Aurora Communicator software)
- Partial counter of energy (uses the same start time as the partial time counter)
- Last 100 fault conditions with error code and time stamp
- Last 100 changes to grid connection parameters with parameter code and new value.

The first two types of data are displayed on the LCD and through the RS-485 interface, while all other data can be displayed only through the RS-485 interface.

## 5.3 LED indicators

There are three LEDs at the side of the display: the first LED from the left (POWER) indicates proper operation of the inverter, the LED in the middle (FAULT) indicates a fault condition, whereas the LED on the right (GFI) indicates a ground fault.

1. The green "Power" LED indicates that the Aurora inverter is operating correctly. This LED flashes upon start-up, during the grid check routine. If a correct grid voltage is detected and wind energy is strong enough to start up the unit, the LED stays on steady. If not, the LED keeps flashing until wind speed becomes strong enough to start up the inverter. In this condition, the display will read " Waiting for wind…."
2. The yellow "FAULT" LED indicates that the Aurora inverter has detected a fault condition. A fault description will appear on the display.
3. The red "GFI" (ground fault) LED indicates that Aurora is detecting a ground fault in the Eolic generator side . When this kind of fault is detected, the Aurora inverter immediately disconnects from the grid and the corresponding fault indication appears on the display. The inverter remains in this condition until the operator presses the ESC key to re-start the grid connection sequence. If the inverter does not reconnect to the grid, contact service to have the system checked.

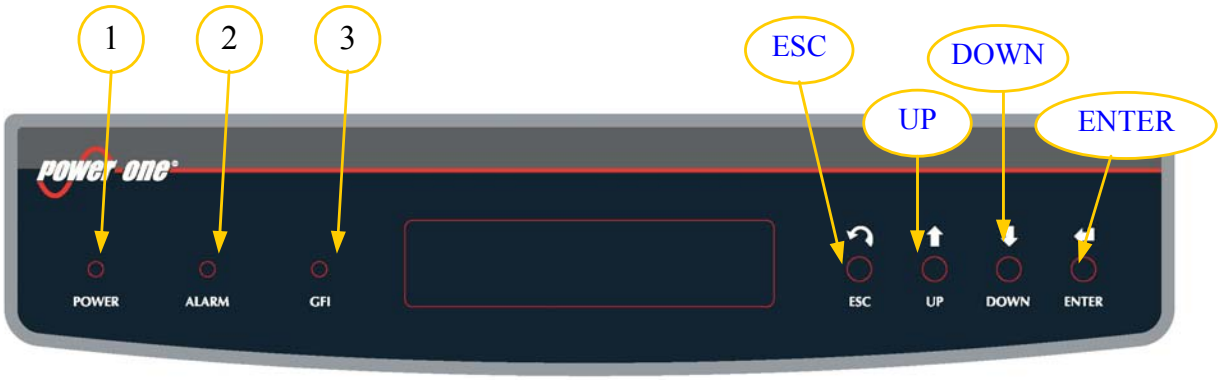


**Fig.19 - LED Location**

**LED indicator combinations and their meanings are listed in the following table.**

**KEY:**

■ **LED on**

◪ **LED blinking**

☒ **LED off**

□ **Any one of the above conditions**

| | LEDs Status | Operational Status | Remarks |
|---|---|---|---|
| **1** | green: ☒<br>yellow: ☒<br>red: ☒ | Aurora self-disconnection during nighttime | Input voltage less than 50 Vdc at both inputs |
| **2** | green: ◪<br>yellow: ☒<br>red: ☒ | Aurora initialization, settings loading, and waiting for grid check | It is in a transition status while operating conditions are being checked. |
| **3** | green: ■<br>yellow: ☒<br>red: ☒ | Aurora is powering the grid | Standard machine operation (search of max. power point or constant voltage). |
| **4** | green: □<br>yellow: □<br>red: ■ | System insulation device faulty | Ground leakage found |
| **5** | green: ☒<br>yellow: ■<br>red: ☒ | Defect – fault!!! | The fault can be inside or outside the inverter. See the alarm appearing on the LCD. |
| **6** | green: ☒<br>yellow: ◪<br>red: ☒ | Installation phase: Aurora is disconnected from grid. | During installation, it refers to set-up of the address for RS-485 communication. |
| **7** | green: ☒<br>yellow: ■<br>red: ☒ | Grid disconnection | Indicates a missing grid condition. |

**NOTE**: Inverter status is indicated by the corresponding LED turning to a steady on condition or flashing, and by a display message that provides a description of the existing operation or fault condition (see the following sections).

G ☒ Y ☒ R ☒

**1) Nighttime mode**

Aurora disconnected during nighttime; this occurs when input power is too low to feed the inverter.

G ◪ Y ☒ R ☒

**2) Aurora initialization and grid check**

Initialization is in progress: input power sufficient to feed the inverter; Aurora is verifying start-up conditions (for instance: input voltage value, insulation resistance value, etc.) and a grid check routine is launched.

G ■ Y ☒ R ☒

**3) Aurora is feeding the grid**

After completing a set of electronics and safety auto-test routines, the inverter starts the grid connection process.

As mentioned above, during this stage Aurora automatically tracks and analyzes the maximum power point of the eolic generator curve.

G □ Y □ R ■

**4) Ground insulation fault**

Aurora indicates that insulation resistance was found to be too low.

This may be due to an insulation fault in the connection between the eolic generator input and the ground.

**WARNING**: Shock hazard! Do not attempt to correct this fault yourself. The instructions below have to be followed very carefully. In case you are not experienced or skilled enough to work safely on the system, contact a specialized technician.

**What to do after an insulation defect has been found:**

When the red LED turns on, try to reset the fault indication by pressing the multi-function ESC key at the side of the display. If the Aurora reconnects to the grid, the fault was due to a transient event (such as condensation and moisture getting into the generator). If this trouble occurs frequently, have the system inspected by a specialized technician.

If Aurora does not reconnect to the grid, open both the AC and DC disconnect switches to place the Aurora into a safe condition and contact an authorized service center to have the system repaired.

| | | |
|---|---|---|
| **G** ☒ | **5)** | **Malfunction/Fault indication** |
| **Y** ■ | | Every time the Aurora inverter's check system detects an operating |
| **R** ☒ | | malfunction or fault of the monitored system, the yellow LED comes on and a message showing the type of problem found appears on the LCD. |
| **G** ☒ | **6)** | **RS-485 address setup indication** |
| **Y** ◪ | | During installation, the yellow LED will keep flashing until the address |
| **R** ☒ | | is acknowledged. For further information about address entry, refer to section 5.5.7.1. |
| **G** ☒ | **7)** | **Grid disconnection** |
| **Y** ■ | | If a grid failure event occurs while the system is in normal operation, the |
| **R** ☒ | | yellow LED turns on steady. |

## 5.4 Messages and Error Codes

The system status is identified through message or error signals appearing on the LCD. The table that follows summarizes the two types of signals that can be displayed.

MESSAGES identify the current Aurora inverter status; so they do not relate to faults and nothing has to be done; messages disappears as soon as the system is back to normal operating conditions. See the W strings in the following table.

ALARMS identify a possible equipment fault or a fault of the connected parts. Alarm signals will disappear as soon as the causes are removed, except for ground insulation faults in the eolic generator, which have to be corrected by qualified personnel. Usually, when an error signal appears, an action is needed. This action will be managed as much as possible by Aurora or, in case this is not possible, Aurora will supply all the necessary help information to the person who will have to perform the maintenance operations to fix the fault on the equipment or system. See the E strings in the following table.

| Message | Warning | Error type | Description |
|---|---|---|---|
| wind Low | W001 | // | Input Voltage under threshold<br>*Input voltage under threshold (when off)* |
| Input OC | // | E001 | Input Overcurrent |
| Input UV | W002 | // | Input Undervoltage |
| Input OV | // | E002 | Input Overvoltage |
| Int.Error | // | E003 | No parameters |
| Bulk OV | // | E004 | Bulk Overvoltage |
| Int.Error | // | E005 | Communication error |
| Out OC | // | E006 | Output Overcurrent |
| Int.Error | // | E007 | IGBT Sat |
| wind Low | W011 | // | Bulk Undervoltage |
| Int.Error | // | E009 | Internal Error |
| Grid Fail | W003 | // | Grid Fail<br>Wrong grid parameters |
| Int.Error | // | E010 | Bulk Low |
| Int.Error | // | E011 | Ramp Fail |
| DC/DC Fail | // | E012 | DcDc Error revealed by inverter<br>DcDc fault detected by inverter |
| Wrong Mode | // | E013 | Wrong Mode<br>(Single instead of dual channel) |
| Over Temp. | // | E014 | Overtemperature<br>Internal temperature too high |
| Cap. Fault | // | E015 | Bulk capacitor fail<br>Bulk capacitor fault |
| Inv. Fail | // | E016 | Inverter fail revealed by DcDc<br>Inverter fault detected by DcDc |
| Int.Error | // | E017 | Start Timeout |
| Ground F. | // | E018 | I leak fai<br>Leakage current fault I |
| Int.Error | // | E019 | Ileak Sensor fail<br>Leakage current fault |
| Int.Error | // | E020 | DcDc relay fail<br>DcDc relay fault |
| Int.Error | // | E021 | Inverter relay fail<br>Inverter relay fault |
| Int.Error | // | E022 | Autotest Timeout |
| Int.Error | // | E023 | Dc-Injection Error |
| Grid OV | W004 | // | Output Overvoltage |
| Grid UV | W005 | // | Output Undervoltage |
| Grid OF | W006 | // | Output Overfrequency |
| Grid UF | W007 | // | Output Underfrequency |

| Message | Warning | Error type | Description |
|---|---|---|---|
| Z Grid HI | W008 | // | Z grid out of range<br>Impedance outside range |
| Int.Error | // | E024 | Unknown Error –<br>Internal Error |
| --------- | // | E025 | Riso Low (Log Only)<br>Low insulation resistance (Log only) |
| Int.Error | // | E026 | Vref Error<br>Wrong reference voltage (VRef) |
| Int.Error | // | E027 | Vgrid Measures Fault<br>Grid voltage (VGrid) misreading |
| Int.Error | // | E028 | Fgrid Measures Fault<br>Grid frequency (FGrid) misreading |
| Int.Error | // | E029 | Zgrid Measures Fault<br>Grid impedance (ZGrid) misreading |
| Int.Error | // | E030 | Ileak Measures Fault<br>Leak current (ILeak) misreading |
| Int.Error | // | E031 | Wrong V Measure<br>Voltage (V) misreading |
| Int.Error | // | E032 | Wrong I Measure<br>Current (I) misreading |
| Fan Fail | W010 | // | Fan Fail (No disconnection)<br>Fan faulty (Log Only) |
| Int.Error | // | E033 | UnderTemperature<br>Internal temperature |
| | // | E034 | Interlock Fail (Not Used) |
| | // | E035 | Remote Off<br>Remote power-off |
| | // | E036 | Vout Avg<br>Average output voltage outside range |
| | W012 | // | Clock Battery Low (No disconnection)<br>Clock battery low (not operating) |
| | W013 | // | Clock Failure (No disconnection)<br>Clock faulty (not operating) |

## 5.5 LCD Display

### *5.5.1 Connection of the system to the grid*

The two-line Liquid Crystal Display is located on the front panel and shows:

- ✓ Inverter operating status and statistics;
- ✓ Service messages for the operator;
- ✓ Error messages and fault indications.

During regular operation, the display will cycle through available data. The display changes to a different screen every 5 seconds, or screens may be scrolled manually by pressing the UP (2nd key from display) and DOWN keys (3rd key from display).

1) These two screens are displayed upon inverter start-up:

```
POWER-ONE
```

```
Initializing…
Please  wait
```

2) The following screens may appear while waiting for the connection to be established:

```
Missing  Grid
```

```
Waiting wind
```

- While the system checks for grid connection to be established ("Missing Grid"), the yellow LED next to the display turns on steady, while the green LED is flashing.
- When waiting for wind ("Waiting wind"), the green LED turns on steady.
- When the "Missing Grid" and "Waiting wind" conditions are verified, the inverter is connected.

3) Time (seconds) to complete output voltage and frequency check.

```
Next connections:
  2            secs
```

4) Shows instant output voltage value and within/outside range status.

```
Vgrid          197.8 V
In range
```

5) Shows instant output frequency value and within/outside range status.

| |
|---|
| **Fgrid 50.17 Hz**<br>**In range** |

6) If measured instant values of voltage (step 4) and frequency (step 5) are outside the allowed range, the following screens are shown alternately
- Next connections (screen 3)
- Vgrid (screen 4)
- Fgrid (screen 5)

7) Instant value of insulation resistance

| |
|---|
| **Meas. Riso**<br>**……** |

### *5.5.2 Error messages*

After the connection is established, the inverter runs a test cycle; if the wrong data is found, the cycle is interrupted and an error code is displayed. Please refer to the table in section 5.4 for error codes and their meanings.
Until the error is rectified, the following screens are alternately displayed:

| |
|---|
| **ERROR**<br>**Code ……..** |

| |
|---|
| **Type OUTD**<br>**Part No……** |

| |
|---|
| **S/N ……..……..**<br>**Firmware……** |

Once the error has been removed, the inverter resets all functions in progress and re-starts the connection (Sect.5.5.1 Connection of the system to the grid, item 2).
- Missing Grid
- Waiting wind

### *5.5.3 First phase - electric parameter check*

**A FEW POINTERS ON DISPLAY KEY OPERATION:**

During normal operation, the display will cycle through available data. The display changes to a different screen every 5 seconds, or screens may be scrolled manually by pressing the UP (2nd key from display) and DOWN keys (3rd key from display).
Either way, pressing the ESC key (right next to the display) calls back the previous menu.

**Fig.20**  **Fig.21** 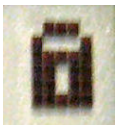

Auto-scroll is indicated by 2 arrows in the top left corner of the display (see Fig.20).
To stop auto-scroll, press the ENTER key (4th key from display). A padlock will appear (see Fig.21).

1A) If the measurements taken previously (see section 5.5.1) are found to be correct, the system will proceed to the next checks. The 12 screens outlined below are shown alternately as listed in this section.

```
Type  OUTD
PN------------
```

2A) shows inverter serial number and firmware revision level.

```
S/N--------- xxxxxx
FW   rel.    C.0.1.1
```

3A)

```
E-tod        0   Wh
$-tod      0.0   $
```

E-tod: Daily energy output.
$-tod: Daily energy savings. Value is expressed in the set currency.

4A)

```
E-tot      -------------
E-par        0  KWh
```

E-tot: Lifetime energy output (since first installation)
E-par: Partial energy output (during selected period)

5A)

```
P-out        0   W
T-inv     -      °C
```

P-out: Measured instant output power
The second line of the display shows the higher of two temperatures:
T-inv: inverter heat sink temperature or
T-boost: Heat sink temperature

6A)

```
Ppk                W
Ppk Day ...........W
```

Ppk: Maximum peak power achieved since partial counter was activated
Ppk Day: Maximum peak power achieved during the day. Counter will reset when unit is powered off.

7A)

```
Vgrid        197  V
Vgrid Avg      0  V
```

Vgrid: Measured instant grid voltage
Vgrid Avg: Average grid voltage during the last 10 minutes of operation

8A)

```
Igrid        0.8  A
Fgrid      50.18 Hz
```

Igrid: Measured instant grid current
Fgrid: Measured instant grid frequency

9A)

```
Vin          0 V
I in       0.0 A
```

Vin: Instant input voltage
Iin: Instant input current

10A)

| |
|---|
| **Pin 0 W** |

Pin: Measured instant input power of channel

11A)

| |
|---|
| **Riso 0.0 Mohm**<br>**Ileak 73 mA** |

Riso: Measured insulation resistance. Unlike the parameters discussed above, this is not an instant value but a one-of-a-kind measurement taken upon inverter start-up.

12A)

| |
|---|
| **Inverter OK**<br>**Wed 17 May 11 23** |

If all items described above tested OK, the inverter shows a corresponding message in the display top line along with date and time. Clock malfunctioning or other non-function-related faults (meaning such faults that do not affect the inverter's ability to generate energy) are shown in the bottom line of the display in place of date and time.
The following error messages are provided:
- CLOCK FAIL indicates clock malfunction; contact service
- BATTERY LOW
- SET TIME, appears the first time the unit is powered up or after the battery has been replaced.
- FAN FAIL: contact service
- MEMORY FAIL: Data logging malfunction. Contact service.

### *5.5.4 Main menu*

When the grid connection sequence described in section 5.5.3 and all electrical parameter checks are completed, other screens become available. These screens let you monitor inverter operation.
Pressing the ESC key (right next to display) gives access to 3 new screens:

| | | |
|---|---|---|
| **Statistics** | **Settings** | **Info** |

**A FEW POINTERS ON DISPLAY KEY OPERATION:**

- Press the UP (2nd key from display) and DOWN keys (3rd key from display) to scroll through items.
- Press the ESC key (right next to display) to go back to the previous menu.
- Press ENTER (4th key from display) to open the selected submenu.

### *5.5.5 Statistics*

Select the Statistics menu to display the following submenu:

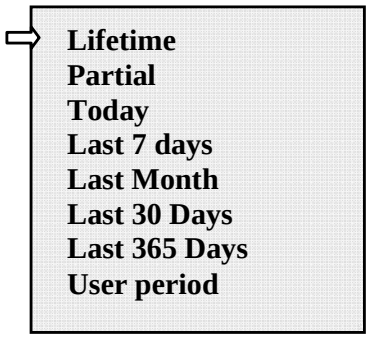


### *5.5.6 Information*

The display has 2 lines; use the keys at the side of the display to scroll through items or open the corresponding submenus as described in section 5.5.3. An arrow on the left side of the display highlights your current selection as shown in the following figure:


#### 5.5.6.1 Lifetime

Select Lifetime to view the following information:

| | |
|---|---|
| **Time** | **h** |
| **E-tot** | **KWh** |
| **Val.** | **$** |
| **CO2** | **lb** |

Time: Lifetime operation time
E-tot: Lifetime energy output
Val.: Money earned
CO2: CO2 saving compared to fossil fuels

#### 5.5.6.2 Partial

Select Partial to view the following information:

| | |
|---|---|
| **Time** | **h** |
| **E-par** | **KWh** |
| **Ppeak** | **W** |
| **Val.** | **$** |
| **CO2** | **lb** |

Time: Total operation time since counter was last reset *
E-par: Total energy output since counter was last reset *
PPeak: Maximum peak power measured since Partial counter was activated
Val.: Money earned since counter was last reset *
CO2: CO2 saving compared to fossil fuels since counter was last reset *

* Hold the ENTER key (4th key from display) depressed for over 3 seconds to reset all counters in this submenu. After 3 seconds, a warning sound is repeated 3 times.

#### 5.5.6.3 Today

Select Today to view the following information:

| | |
|---|---|
| **E-tod** | **KWh** |
| **Ppeak** | **W** |
| **Val.** | **$** |
| **CO2** | **lb** |

E-tod: Total energy output during the day
Ppeak: Peak power achieved during the day
Val: Money earned during the day
CO2: CO2 saving compared to fossil fuels during the day

#### 5.5.6.4 Last 7 days

Select Last 7 days to view the following information:

| | |
|---|---|
| **E-7d** | **KWh** |
| **Val.** | **$** |
| **CO2** | **lb** |

E-7d: Total energy output during the last 7 days
Val.: Money earned during the last 7 days
CO2: CO2 saving compared to fossil fuels during the last 7 days

#### 5.5.6.5 Last Month

Select Last Month to view the following information:

| | |
|---|---|
| **E-mon** | **KWh** |
| **Val.** | **$** |
| **CO2** | **lb** |

E-mon: Total energy output during the month
Val.: Money earned during the month
CO2: CO2 saving compared to fossil fuels during the month.

#### 5.5.6.6 Last 30 Days

Select Last 30 Days to view the following information:

| | |
|---|---|
| **E-30d** | **KWh** |
| **Val.** | **$** |
| **CO2** | **lb** |

E-30d: Total energy output during the last 30 days
Val.: Money earned during the last 30 days
CO2: CO2 saving compared to fossil fuels during the last 30 days

#### 5.5.6.7 Last 365 Days

Select Last 365 Days to view the following information:

| | |
|---|---|
| **E-365d** | **KWh** |
| **Val.** | **$** |
| **CO2** | **lb** |

E-365d: Total energy output during the last 365 days
Val.: Money earned during the last 365 days
CO2: CO2 saving compared to fossil fuels during the last 365 days

#### 5.5.6.8 User period

**User period**

This feature measures energy saving during a period selected by the user.
Press ENTER from the "User period" screen to access the following submenu:

| | |
|---|---|
| **Start** | **23 June** |
| **End** | **28 August** |

Use the display keys to set the start and end date of the period as follows:

- Use ENTER to move from one field to the next (from left to right)
- Use ESC to go back to the previous field (from right to left)
- Press ESC repeatedly to go back to the previous menus as described in section 5.5.3

To set days:

- Press DOWN to scroll numbers backwards (from 31 to 1)
- Press UP to scroll numbers from 1 to 31

To set the month:

- Press DOWN to scroll months from December to January
- Press UP to scroll months from January to December

If set dates are inconsistent, the display alerts the user to the problem:

**Data err**

### *5.5.7 Settings*

Select "Settings" from the Main menu (section 5.5.4) to display the first screen that refers to the password:

**Password**
********


Default password is 0000. It can be changed using the keys on display:

- Use ENTER to move from one figure to the next (from left to right)
- Use ESC to go back to the previous figure (from right to left)
- Press ESC repeatedly to go back to the previous menus as described in section 5.5.3
- Press DOWN to scroll numbers backwards (from 9 to 0)
- Press UP to scroll numbers from 0 to 9

Type in the correct password and press ENTER to access all information of this section:

**Address**
**Display Set**
**Service**
**New Password**
**Cash**
**Time**
**Language**
**Vstart**
**Autotest**
**Alarm**
**Remote Control**
**UV Prot.time**
**MPPT scan EN/DIS**
**Scan Period**

The display has 2 lines; use the keys at the side of the display to scroll through items or open the corresponding submenus as described in section 5.5.4 **A FEW POINTERS ON DISPLAY KEY OPERATION.**
An arrow on left side of the display highlights your current selection. When the chosen item is selected, press ENTER to open its submenu.

#### 5.5.7.1 Address

This function is used to set addresses for communication of the single inverters connected in the system on an RS485 line. You can assign numbers from 2 to 250. Press UP and DOWN to scroll numbers.
If you do not want to manually set the address of each inverter, select the AUTO function and they will be distributed automatically.


#### 5.5.7.2 Display Set

This function is used to set display features:

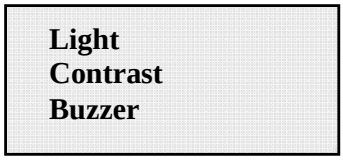


1) **Light**: display light setting:


- Use the MODE key to set display backlighting.
Select the Mode item with the arrow, and press ENTER to open the relevant submenu. shown on this screen:


ON: Light always on
OFF: Light always off
AUTO: Automatic light setting. It turns on every time a key is pressed and stays on for 30 seconds then gradually turns off.

- Use the INTENSITY key to set the intensity of backlighting from 0 to 9.

2) **Contrast**: display light contrast
Available display light tones go from 0 to 9.
Press UP and DOWN to scroll numbers and then press ENTER to confirm.

3) **Buzzer:** key tone setting
Selecting:
ON: key tone on
OFF: key tone off

#### 5.5.7.3 Service

Only installing staff can gain access to this function, which is password-protected and dedicated code is supplied by Power-One.

#### 5.5.7.4 New Password

This function is used to change the default password 0000.
To set your personal code, use the display keys as follows:

- Use ENTER to move from one digit to the next (from left to right)
- Use ESC to go back to the previous digit (from right to left)
- Press ESC repeatedly to go back to the previous menus as described in section 5.5.3
- Press DOWN to scroll numbers backwards (from 9 to 0)
- Press UP to scroll numbers from 0 to 9

#### 5.5.7.5 Cash

This function is about energy output savings.

```
Name      $
Val/KWh   00.50
```

Name: set desired currency, using keys as usual. Default currency is US Dollar.
Val/KWh: it indicates the cost of 1 KWh expressed in set currency. Default setting is 0.50 Euro.

#### 5.5.7.6 Time

This function allows time and date setting.

```
Time  14:21
Date  17  May  2006
```

#### 5.5.7.7 Language

It is possible to set the national language or English.

⇨ **English**
**Italiano**

#### 5.5.7.8 Start-up Voltage

Start-up voltage can be set according to the available eolic generator. Voltage range can be 50V to 350V. Default setting for Aurora is 200V. This parameter can be changed by means of the display keys.

**VStart**
**200V**

#### 5.5.7.9 Autotest

This is the Aurora inverter's internal test for checking correct operation of the protection and the grid interface device, as provided for by UL 1741 regulation.

**Autotest**

Press ENTER to access all information of this section:

⇨ **OV test**
**UV test**
**OF test**
**UF test**
**DC injection**

OV = Max. voltage
UV = Min. voltage
OF = Max. Frequency
UF = Min. Frequency
DC injection = Output current direct component. This component shall not be >0.5% with respect to inverter maximum rated current, or the unit will switch off.

The display has 2 lines; use the keys at the side of the display to scroll through items or open the corresponding submenus.
An arrow on left side of the display highlihghts your current selection. When the chosen item is selected, press ENTER to open the submenu.
As soon as test is selected, the display shows

| |
|---|
| **Test in progress**<br>**……..** |

During the test the display gives test progress indication.
If the test passes, depending on selected item, the display shows:

| | | |
|---|---|---|
| **Test V= …. V**<br>**OK T= ….ms** | **Test F=…. Hz**<br>**OK T= ….ms** | **Test I=…. mA**<br>**OK T= ….ms** |

V= measured voltage; T= time necessary to take the measurement
F= measured frequency; T= time necessary to take the measurement
I=measured current; T=time necessary to take the measurement

If the test fails, the following will be displayed:

| | | |
|---|---|---|
| **Test V= …. V**<br>**Fail T= ….ms** | **Test F=…. Hz**<br>**Fail T= ….ms** | **Test I=…. mA**<br>**Fail T= ….ms** |

V= measured voltage; T= time necessary to take the measurement
F= measured frequency; T= time necessary to take the measurement
I=measured current; T=time necessary to take the measurement

#### 5.5.7.10 Alarm

The inverter features an alarm function that opens or closes a relay contact, access can be gained through the front panel; the Alarm Contact Terminal Block is shown in Fig. 22. This relay contact can be used for instance to activate a siren or a visual alarm in case the inverter is disconnected from the grid (no energy output) or for any alarm event generated by the system.
This function can activate two alarm modes. Press ENTER to open the relevant submenu:

⇨ **Production**
**Fault**

An arrow on left side of the display highlights your current selection. When the chosen item is selected, press ENTER to confirm activation of the chosen mode.
**PRODUCTION**: Relay is only activated when inverter is connected to the grid (contact closing across terminals "N.O." and "C")
**FAULT**: triggers relay activation (contact closing across terminals "N.O." and "C"), only when an error signal occurs, i.e. when grid is disconnected, excluding Input Under Voltage.

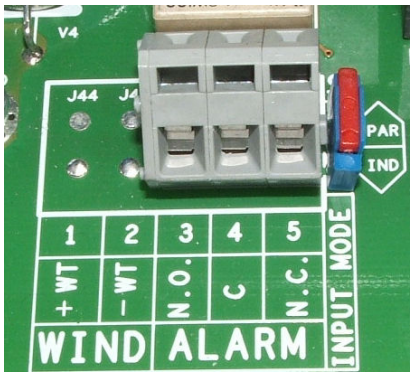


**Fig. 22 - Alarm Contacts Terminal Block**

5.5.7.11 Remote Control

This function is used to disable the inverter manual switch-off. Operation is as follows:
- set to ENABLE to activate manual ON/OFF function
- set to DISABLE to disable manual ON/OFF function, so that Aurora operation will only depend on external solar radiation.

| | |
|---|---|
| **Remote ON/OFF Enable** | **Remote ON/OFF Disable** |

Manual ON and OFF input is read on inverter digital input. When set to OFF, the display will cycle through the following screens:

| | |
|---|---|
| **Remote OFF** | **Waiting Rem.ON… ….to restart** |

#### 5.5.7.12 UV Prot. time

This function is used to set inverter connection time after input voltage drops below Under Voltage limit, set at0.7*Vstart.
For example: if UV Prot. .time is set at 60 seconds, and Vin voltage drops below 0.7*Vstart at 9.00, the inverter stays connected to the grid (at 0 power) up to 9.01.

Power-One sets this time at 60 seconds. The user can change this setting and set it from 1 second to 3600 seconds.

#### 5.5.7.13 MPPT scan

This function is used to automatically detect input power max. multiples.

| |
|---|
| **MPPTscan En7Dis**<br>**Enable** |

#### 5.5.7.14 Scan Interval

This function is used to set time interval for system max.multiple scan. Default setting is 15 minutes.

| |
|---|
| **Scan Interval**<br>**15 min** |

### *5.5.8 Info*

This menu is used to display all Aurora data:

- Part No. (part number)
- Serial No. – Wk – Yr (serial number, week, year)
- Fw rel (firmware release level)

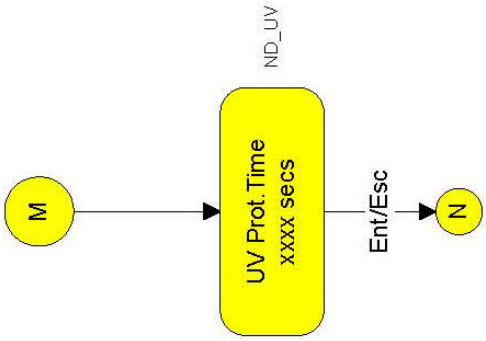


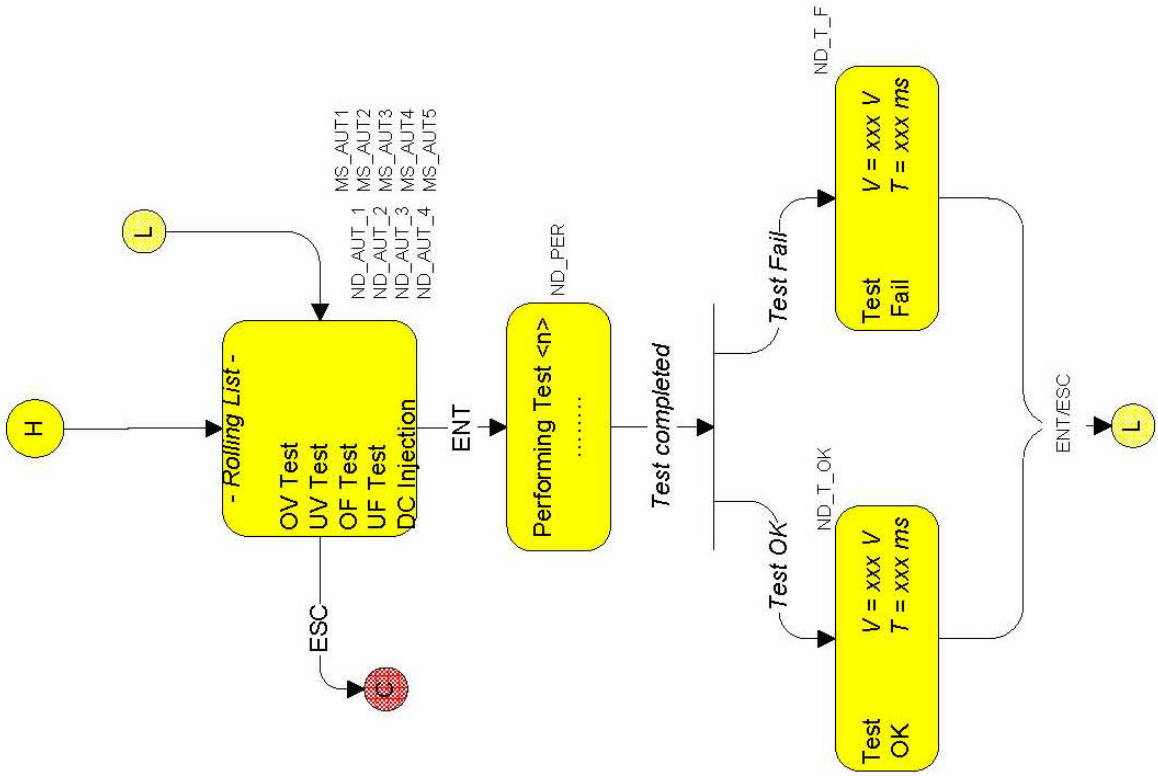

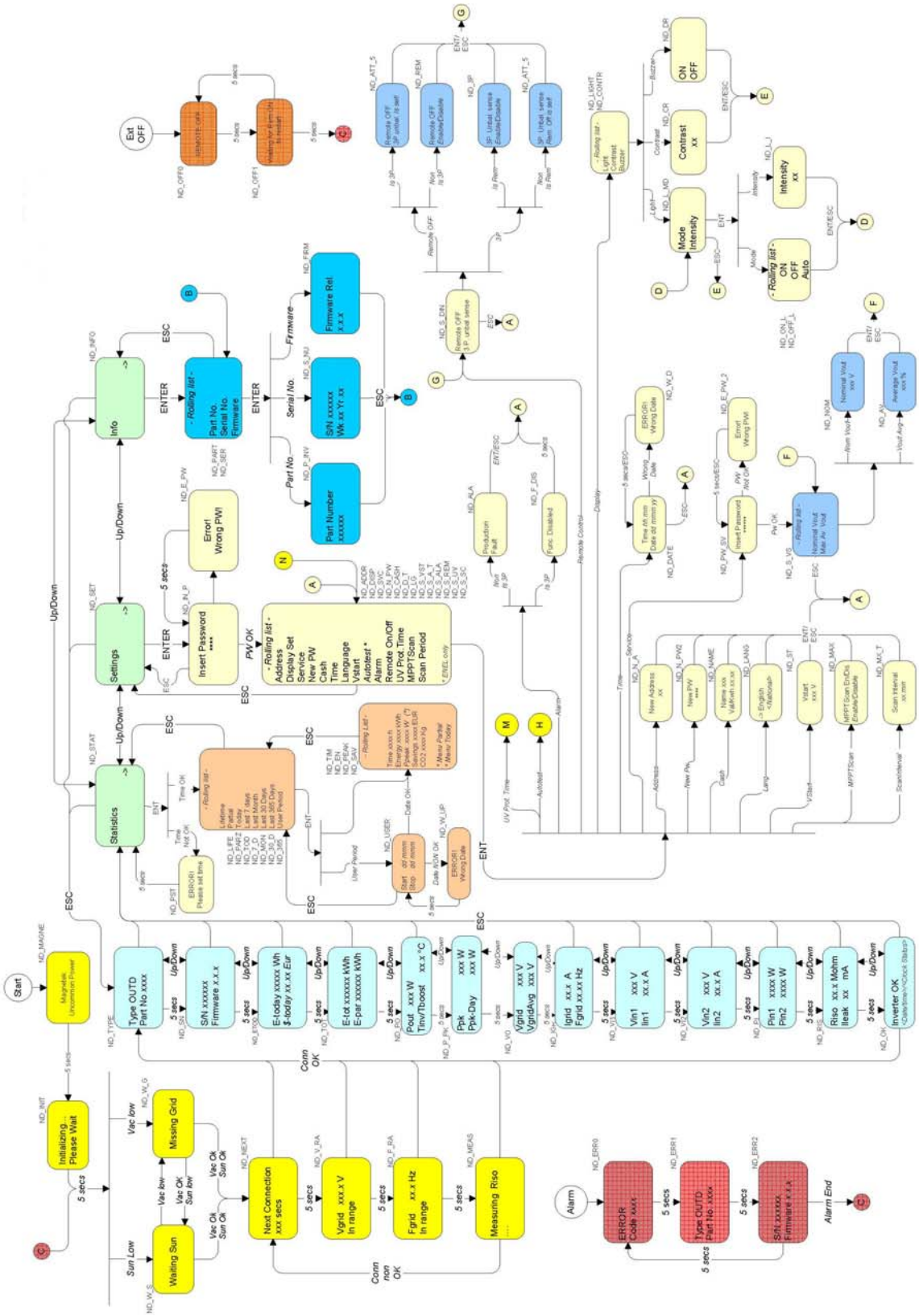
Start
Initializing... Please Wait
Waiting Sun
Missing Grid
Next Connection xxx secs
Vgrid xxx.x V In range
Fgrid xx.x Hz In range
Measuring Riso
Type OUTD Part No xxxx
S/N xxxxxx Firmware x.x.x
E-today xxxxx Wh
E-tot xxxxxx kWh
Pout xxx W Tinv/Tboost xx.x °C
Ppk xxx W Ppk-Day xxx W
Vgrid xxx V VgridAvg xxx V
Igrid xx.x A Fgrid xx.xx Hz
Vin1 xxx V Iin1 xx.x A
Vin2 xxx V Iin2 xx.x A
Pin1 xxxx W Pin2 xxxx W
Riso xx.x Mohm Ileak xx mA
Inverter OK
Alarm
ERROR Code xxxx
Alarm End
Ext OFF
Info
Settings
Statistics
Insert Password
Error! Wrong PW!
Part Number xxxxxx
S/N xxxxxx Wk xx Yr xx
Firmware Rel x.x.x
Mode Intensity
Contrast xx
Intensity xx
ON OFF Auto
ON OFF
Conn OK
Conn non OK
Up/Down
ENTER
ESC
ENT

# 6 DATA CHECK AND COMMUNICATION

## 6.1 Connection through RS-485 serial port or RJ12 connectors

### *6.1.1 RS-485 serial port*

RS-485 serial port uses a three-wire cable: two wires are for signals and the third one is for a ground connection. The cables are routed through the hole located on the bottom of the Inverter which is blanked with waterproof plugs (see Fig. 23 -23a). Supplied cable gland must be installed in the hole selected for use.


**Fig.23 - Hole for cables necessary for RS-485 port connection or wiring for RJ12 connectors connection.**

After passing through cable gland, cables are connected inside of the unit to RS-485 terminal blocks that can be reached by removing the front cover. Refer to paragraph 3.3.1 for details on correct front cover removal and reassembly procedure. Refer to paragraph 3.3.5 for details on correct cabling.

- Signal wires must be connected to +T/R and –T/R terminals
- Ground wire must be connected to RTN terminal

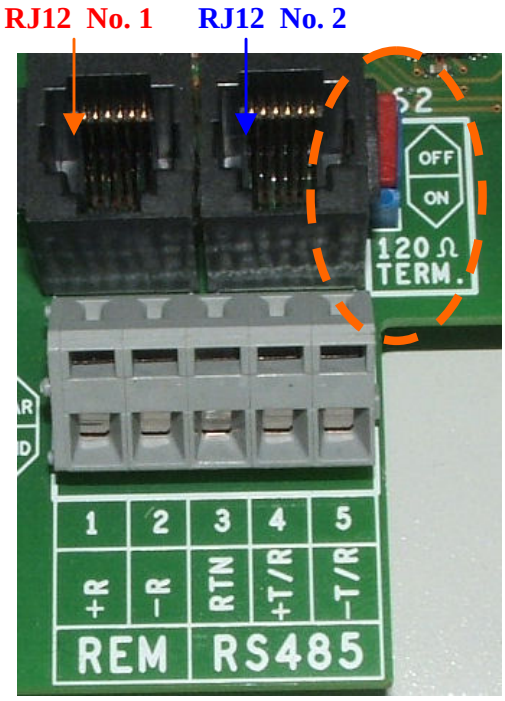


**Fig. 24 - Terminals for connection to RS-485 serial line and S2 switch**

### *6.1.2 RJ12 connectors*

As an alternative to RS485 serial connection, whether using single units or a daisy chain, inverter connection can be performed by means of RJ12 connectors (see Fig. 24).

Wiring is again routed through the holes located at the bottom of the Inverter which are blanked with waterproof plugs (see Fig. 23). Input wiring passes through one hole and is to be assembled to one of the RJ12 connectors; it does not matter whether it is no. 1 or no. 2 since signals are the same considering that they are connected in parallel. Output wiring goes out from the other RJ12 connector through the other hole and extends to the next unit.

| **RJ12 connectors** | | | |
|---|---|---|---|
| 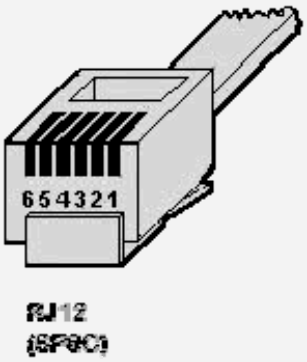  | **Pin #** | **Signal Name** | **Description** |
| | 1 | | Not Used |
| | 2 | **+TR** | ***+ Data Line***<br>Required for RS485 communication. |
| | 3 | **+R** | ***Remote OFF***<br>Required or Remote OFF control (see section 5.5.7.11 for details). |
| | 4 | **-TR** | ***- Data Line***<br>Required for RS485 communication. |
| | 5 | | Not Used |
| | 6 | **RTN** | ***Signal Return***<br>Common reference for logical signals. |

### *6.1.3 Daisy chain*

The RS-485 terminal block or RJ12 connectors can be used to connect a single Aurora inverter or multiple Aurora inverters connected in a daisy chain. The maximum number of inverters that can be connected in a daisy chain is 248. The recommended maximum length of this chain is 1200 meters.

In a case where multiple inverters are connected in a daisy chain, it is necessary to assign an address to each unit. Refer to paragraph 5.5.7.1 for instructions on how to set addresses.

In addition, the last inverter of the chain must have line termination contact active (S2 switch -120Ω TERM set to ON). See Fig.. 24.

Any Aurora device is supplied with default address two (2) and with the S1 DIP switch in the OFF position.

In order to ensure optimum communication on the RS485 line, Power-One recommends connecting the PVI-RS232485 adapter to a location between the first unit of the daisy chain and the computer. See Fig. 25 for further details.

Other equivalent devices available on the market can also be used but Power-One does not assure correct connection operation since their equipment has never been tested with these equivalent devices.

Please note that these other equivalent commercial devices could require an external termination impedance, which is not necessary for Aurora PVI-232485.

Figure 25 shows you how to connect multiple units into a daisy chain configuration.

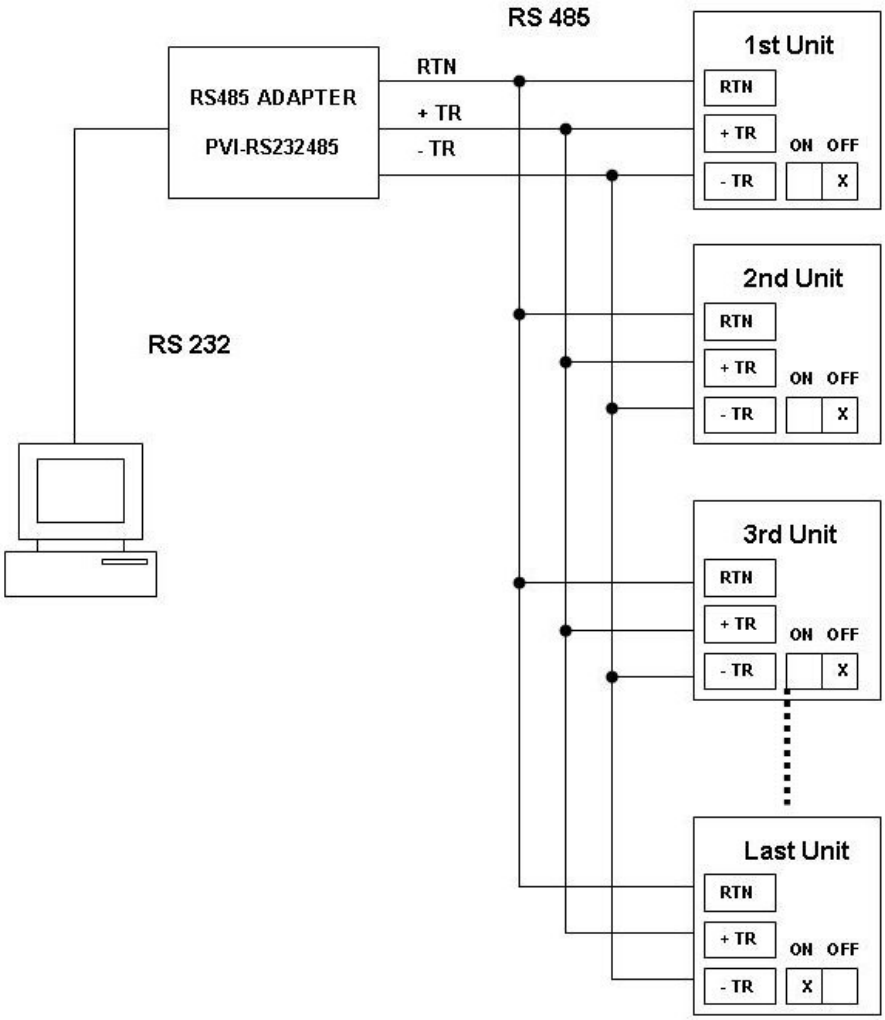


**Fig. 25 - Daisy Chain Multiple Connection**

**NOTE**: When using an RS-485 link there can be up to 248 inverters connected on the same link. Choose any address between 2 and 248.

**NOTE**: When using the RS-485 link, in case one or more inverters are added later to the system, please remember to switch the DIP-switch of the former last inverter of the system back to the OFF position

## 6.2 Serial connection with USB port

Serial connection through use of the inverter's USB port allows connection of a single inverter to a personal computer equipped with a USB 2.0 interface and dedicated software supplied by Power-One. The PC-inverter connection cable is a standard USB 2.0 cable, 5 meters long, with terminals of the A and B type. Just remove the waterproof plug located on Aurora's side to make the connection (see Fig. 26).


**Fig.26 - USB Connection**

## 6.3 Wind speed and Alarm contact connection

Three connections are provided to drive an external alarm: a common contact, a normally open contact and a normally closed contact. To cable alarm contact use a three-wire or two-wire cable. The cables are routed through the hole located on the bottom of the Switch box which is blanked with waterproof plugs (see Fig. 23). Refer to 3.3.5 for correct cabling procedure.
Two connection are provided for wind speed reading from the external wind box. To cable wind speed contacts use a two-wire cable.

## 6.4 Measurement Accuracy

Every measure should consider possible errors.
The following tables show for each reading:

- measurement units;
- capacity;
- resolution.

| | Name of measured variable | Unit of Measure | Resolution | | Maximum error percentage |
|---|---|---|---|---|---|
| | | | Display | Value | |
| Input voltage PV N°1 | VP1 | Vdc | 1V | 600mV | 2% |
| Input voltage PV N°2 | VP2 | Vdc | 1V | 600mV | 2% |
| Input current PV N°1 | IP1 | Adc | 0.1A | 25mA | 2% |
| Input current PV N°2 | IP2 | Adc | 0.1A | 25mA | 2% |
| Output power PV N°1 | Pin1 | W | 1 W | 10 W | 2% |
| Output power PV N°2 | Pin2 | W | 1 W | 10 W | 2% |
| Output voltage | Vout | V | 1V | - | 2% |
| Output current | Iout | A | 0.1A | - | 2% |
| Output power | Pout | W | 1 W | - | 2% |
| Frequency | Freq | Hz | 0.01 | 0.01 | 0.1% |
| Accumulated energy | Energy | Wh | 1Wh | | 4% |
| Time counter | Lifetime | hh:mm:ss | 1s | | 0.2 |
| Partial time counter | Partial Time | hh:mm:ss | 1s | | 0.2 |

# 7 TROUBLESHOOTING

Aurora inverters comply with standards set for grid-tied operation, safety, and electromagnetic compatibility.

Before being delivered, the product has been successfully subjected to several tests to check: operation, protective devices, performance, and durability.

All these tests, together with the system ensuring Power-One quality, guarantee Aurora optimal operation.

In case of any possible malfunction of the inverter, solve problems as follows:

- ✓ Work under safe conditions, as stated in section 3.3 and following, check that connections between the Aurora, eolic field, and power distribution grid have been made correctly.

- ✓ Carefully observe which LED is blinking and read the signal appearing on the display; then, following the instructions given in chapters 5.3, 5.4, and 5.5, try to identify the type of fault found.

If the malfunction cannot be removed by following these instructions, contact the service center or the installer (see following page).

Before contacting the service center, keep the following information handy:

**INFO Aurora**

**NOTE:** Information to be found directly on LCD

- ✓ Aurora model?
- ✓ Serial number?
- ✓ Week of production?
- ✓ LED flashing?
- ✓ Light blinking or steady?
- ✓ Signal displayed?

- ✓ Malfunction short description?
- ✓ Can malfunction be reproduced?
- ✓ If so, how?
- ✓ Does malfunction appear cyclically?
- ✓ If so, how frequently?
- ✓ Is malfunction present from installation?
- ✓ If so, has it worsened?
- ✓ Description of the atmospheric conditions when the malfunction appeared.

**INFO on the Eolic Generator**

- ✓ Make and model of Eolic generator
- ✓ System structure: - max. voltage and current values
  - Power curve of the turbine + generator

# 8 TECHNICAL FEATURES

## 8.1 Input Values

| Description | Value PVI–3-0-OUTD | Value PVI–3.6-OUTD | Value PVI–4.2-OUTD |
|---|---|---|---|
| Max. reccomended DC power input | 3500 W | 4150 W | 4820 W |
| Nominal DC power input | 3120 W | 3750 W | 4380 W |
| Nominal input voltage | 360 Vdc | 360 Vdc | 360 Vdc |
| Max. absolute input voltage | 600 Vdc | 600 Vdc | 600 Vdc |
| Input voltage, MPPT operating range | from 50 Vdc to 580 Vdc | from 50 Vdc to 580 Vdc | from 50 Vdc to 580 Vdc |
| Input voltage, MPPT operating range at full power | from 200 Vdc to 530 Vdc | from 200 Vdc to 530 Vdc @Vgrid = 277 Vac or 240 Vac ; from 220 Vdc to 530 Vdc @Vgrid = 208 Vac | from 200 Vdc to 530 Vdc @Vgrid = 277 Vac or 240 Vac ; from 220 Vdc to 530 Vdc @Vgrid = 208 Vac |
| Max. short circuit current (of each array) | 12.5 Adc | 20 Adc | 20 Adc |
| Max. operating input current (of each input) | 10 Adc | 16 Adc | 16 Adc |
| Input backfeed current | Negligible | Negligible | Negligible |

| | | | |
|---|---|---|---|
| Max. input power (of each channel) | 2000 W | 3000 W | 3000 W |
| PV Ground fault protection | Ground fault detector and interruption provided | | |
| Input channels configuration | Two channels in parallel | | |

(1) The total input power shall not exceed the max. Recommended DC power

**NOTE:** If the input current supplied by the eolic generator connected to the inverter is above the max. value and the input voltage is within the allowed range, the inverter will not be damaged.

## 8.2 Output values

| Description | Value PVI–3.0-OUTD | Value PVI–3.6-OUTD | Value PVI–4.2-OUTD |
|---|---|---|---|
| Nominal output power | 3000 W | 3600 W | 4200 W |
| Grid voltage, maximum range | 183 to 304 Vac | 183 to 304 Vac | 183 to 304 Vac |
| Grid voltage, nominal | 277V single phase or 240V split phase (default) or 208V single phase (setting required) | 277V single phase or 240V split phase (default) or 208V single phase (setting required) | 277V single phase or 240V split phase (default) or 208V single phase (setting required) |
| Grid voltage, operating range as per UL 1741 regulation | 88% to 110% of nominal voltage (211 to 264Vac for V=240Vac) | 88% to 110% of nominal voltage (211 to 264Vac for V=240Vac) | 88% to 110% of nominal voltage (211 to 264Vac for V=240Vac) |
| Grid frequency, nominal | 60 Hz | 60 Hz | 60 Hz |
| Grid frequency, operating range as | 59.3 to 60.5 Hz | 59.3 to 60.5 Hz | 59.3 to 60.5 Hz |

| | | | |
|---|---|---|---|
| per UL 1741 regulation | | | |
| Nominal output current | 10.8/12.5/14.4 Arms | 13/15/17 Arms | 15.1/17.5/19.9 Arms |
| Max. output current | 12/14.5/14.5 Arms | 16/17.2/17.2 Arms | 20/20/20 Arms |
| Output over current protection | 15/20/20 Arms | 20/25/25 Arms | 25/25/25 Arms |

## 8.3 Grid protection characteristics

| | |
|---|---|
| Anti islanding protection | Complies with:<br>- UL 1741 standard. |

## 8.4 General characteristics

| **Descrizione** | **Valore PVI–3-0-OUTD** | **Valore PVI–3.6-OUTD** | **Valore PVI–4.2-OUTD** |
|---|---|---|---|
| Maximum efficiency | 96.8% (96 EURO) | 96.8% (96 EURO) | 96.8% (96 EURO) |
| Internal consumption during stand-by | < 8 W | < 8 W | < 8 W |
| Internal consumption during nighttime | < 2 W | < 2 W | < 2 W |
| Operating ambient temperature | -25°C to +60°C (*) | -25°C to +60°C (*) | -25°C to +60°C (*) |
| Casing protection rating | IP65 / Nema 4X | IP65 / Nema 4X | IP65 / Nema 4X |
| Audible noise with internal fan on | < 50 dbA @ 1m | < 50 dbA @ 1m | < 50 dbA @ 1m |

| | | | |
|---|---|---|---|
| Size (height x width x depth): | 787 x 325 x 208mm | 787 x 325 x 208mm | 787 x 325 x 208mm |
| Weight | 18 kg | 18 kg | 18 kg |
| Relative Humidity | 0 – 100 % condensation point | 0 – 100 % condensation point | 0 – 100 % condensation point |

(*) Full power guaranteed up to T.amb = 45°C for PVI-4.2, 55°C for PVI-3.6 and 55°C for PVI-3.0 (as far as unit is not exposed to direct sun radiation)

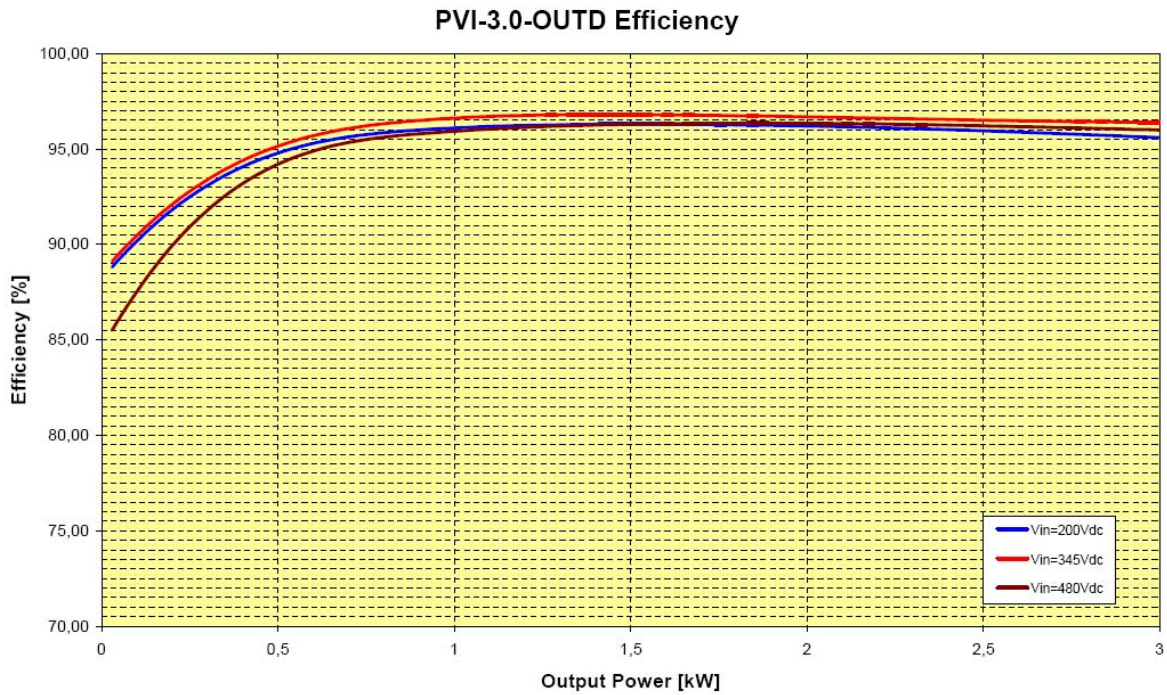


Fig. 27 – Efficiency curve PVI-3.0-OUTD

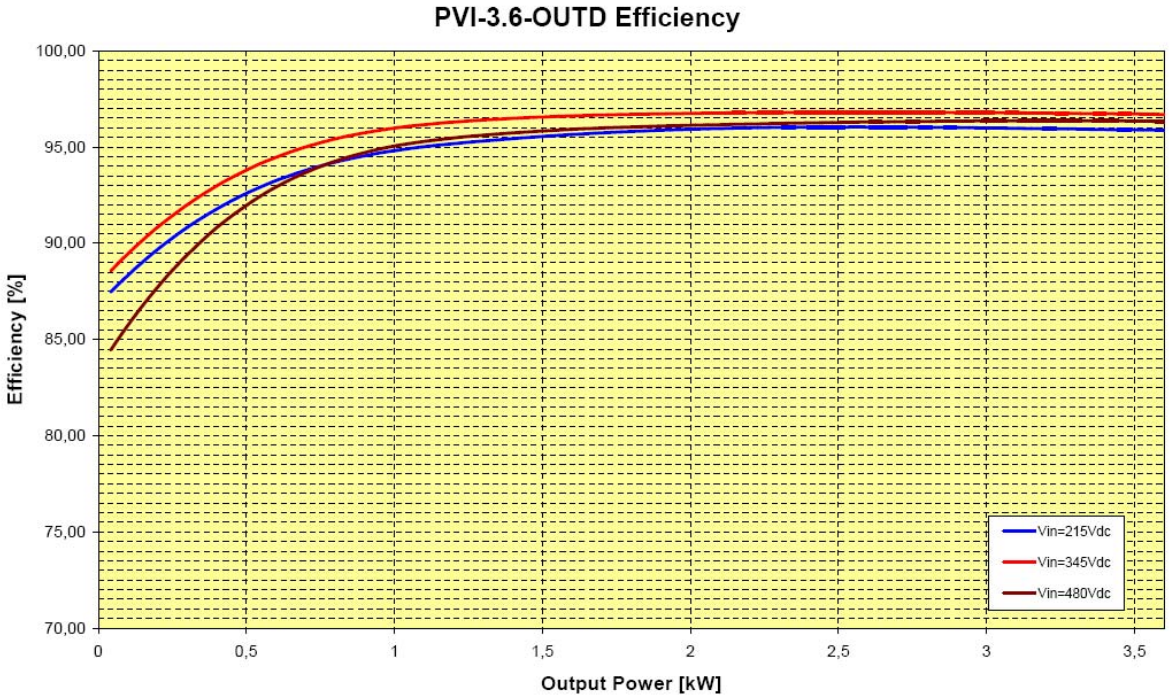


Fig. 28 – Efficiency curve PVI-3.6-OUTD

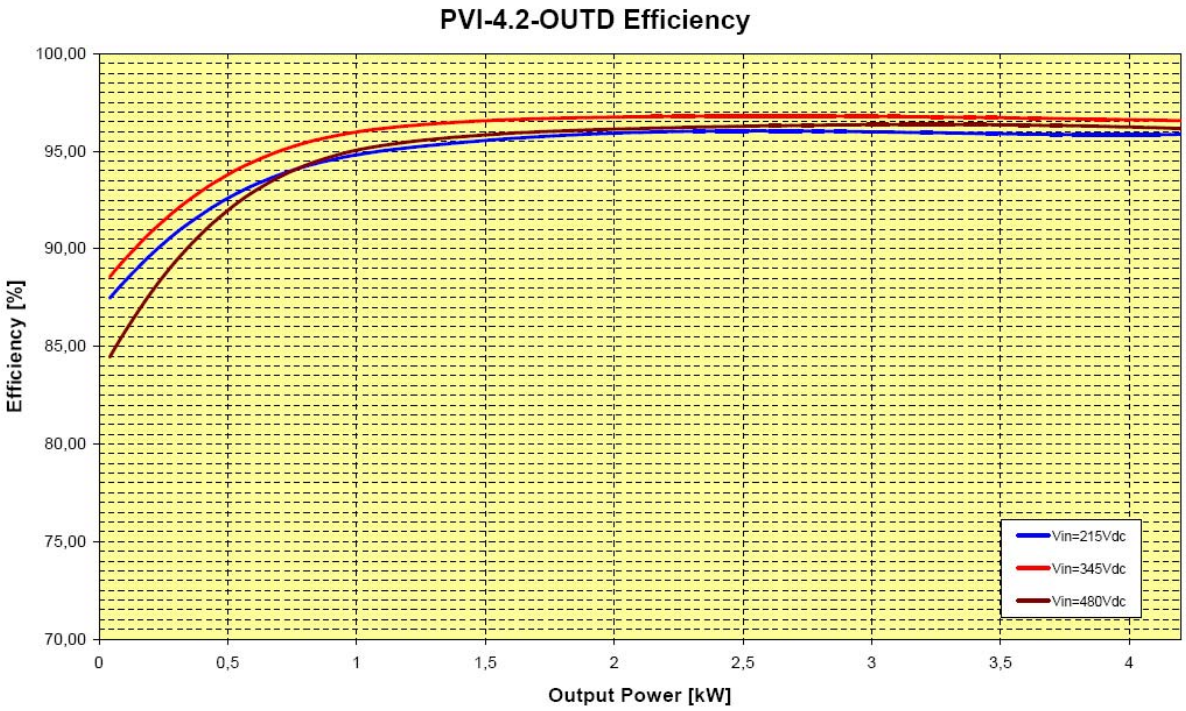


Fig. 29 – Efficiency curve PVI-4.2-OUTD

## 8.5 Input Source Backfeed Current

PVI-4.2(3.6, 3.0)-OUTD-x-US Grid Tied Inverters are provided with two separate and consecutive power stage:

- Booster Stage (DC-DC converter) connected to DC Input Terminals.
- Inverter Stage (DC-AC converter) connected to AC Output Grid Terminals.

The Booster Stage is provided with forward diodes that allows the current (power) flow only from DC Input terminals towards Inverter (Output) Stage.

In case of any fault on Inverter Stage, these diodes avoid any back-feed current phenomena towards input terminals.
In case of fault of the forward diode, the corresponding booster MOSfet goes immediately and permanently in short circuit state and it avoids any current propagation form output to input terminals.

Abnormal Fault tests conducted during UL1741 qualification show also that these type of faults produce the opening of internal grid disconnect relays and cause the external AC CB protection devices to trip, preventing any power flow from the grid.

In conclusion for PVI-4.2(3.6, 3.0)-OUTD-x-US-y models it is not possible to have any single fault responsible of Input source back-feed current flow. For these models the Back-feed current into DC Source is negligible.

## 8.6 Voltage and frequency limits

The UL1741 requires, for voltage and frequency, the following limits for utility interaction:

| Condition | Simulated utility source | | Maximum time (sec) at 60 Hz[a] before cessation of current to the simulated utility |
|---|---|---|---|
| | Voltage (V) | Frequency (Hz) | |
| A | $< 0.50\ V_{nor}$[b] | Rated (60 Hz) | 0.16 |
| B | $0.50\ V_{nor}$[b] $\leq V <$ $0.88\ V_{nor}$ | Rated (60 Hz) | 2 |
| C | $1.10\ V_{nor}$[b] $< V <$ $1.20 V_{nor}$ | Rated (60 Hz) | 1 |
| D | $1.20 V_{nor} \leq V$ | Rated (60 Hz) | 0.16 |
| E | Rated | f > rated + 0.5[c] | 0.16 |
| F | Rated | f < rated –0.7[c] | 0.16 |

[a] When a utility frequency other than 60 Hz is used for the test, the maximum number of cycles it takes to cease to export power to the simulated utility shall not exceed the number of cycles a utility frequency of 60 Hz takes regardless of the time the inverter takes to cease to export power to the simulated utility.

[b] V is the nominal output voltage rating.

[C] The rate of change in frequency shall be less than 0.5 Hz per second.

The PVI-4.2(3.6,3.0)-OUTD-x-US voltage and frequency limits are listed in the following table:

| Condition | Trip Limits | | Trip Times (sec) |
|---|---|---|---|
| | Voltage (V) | Frequency (Hz) | |
| A | $< 0.55\ V_{nor}$ [b] | Rated (60 Hz) | 0.12 |
| B | $0.55\ V_{nor}$ [b] $\leq V < 0.90\ V_{nor}$ | Rated (60 Hz) | 1.8 |
| C | $1.08\ V_{nor}$ [b] $< V <$ max(1.18 $V_{nor}$; 310Vac) | Rated (60 Hz) | 0.9 |
| D | max(1.18 $V_{nor}$; 310Vac)$V_{nor} \leq V$ | Rated (60 Hz) | 0.12 |
| E | Rated | f > rated + 0.42 | 0.12 |
| F | Rated | f < rated –0.62 | 0.12 |
| Accuracy | 2% | 0.02Hz | 0.033 |

[b] V is the nominal output voltage rating.

## 8.7 Fault Current

The output current in case of fault (short circuit between lines or between line and neutral) has been measured according to UL1741 requirements. The following tables shows the corresponding current and duration:

| **Models** | **Output Voltage** | **Fault Current RMS (A)** | **Duration (mSec) 3 cycles** | **Fault Current PK (A)** | **Total Duration (mSec)** |
|---|---|---|---|---|---|
| PVI-4.2-OUTD Series | 208 | 13.5 | 49.92 | 122.4 | 119.0 |
| | 240 | 14.7 | 49.92 | 164.4 | 120.9 |
| | 277 | 12.3 | 49.92 | 165.9 | 123.2 |
| PVI-3.6-OUTD Series | 208 | 12.2 | 49.92 | 93.9 | 124.4 |
| | 240 | 12.5 | 49.92 | 136.5 | 120.2 |
| | 277 | 11.3 | 49.92 | 164.6 | 116.3 |

| | | | | | |
|---|---|---|---|---|---|
| PVI-3.0-OUTD Series | 208 | 11.7 | 49.92 | 162.0 | 121.8 |
| | 240 | 10.6 | 49.92 | 139.7 | 118.9 |
| | 277 | 8.6 | 49.98 | 92.2 | 116.5 |

## 8.8 Power Derating

In order to ensure inverter operation under safe conditions both from the temperature and electrical point of view, the unit automatically decreases power input in the distribution grid.
Power derating can occur in two cases:

**Power reduction due to environmental conditions**
Power reduction and temperature at which it occurs depend on many operating parameters other than ambient temperature, such as input voltage, grid voltage, and power available from the eolic generator. The Aurora inverter can thus decrease power output during certain periods of the day according to these parameters.
In any case, the inverter ensures top power up to 40°C ambient temperature, when it is not directly exposed to the sun.

**Power reduction due to input voltage**
The graph in Fig. 27 shows automatic power output derating when input or output voltage is too high or too low.

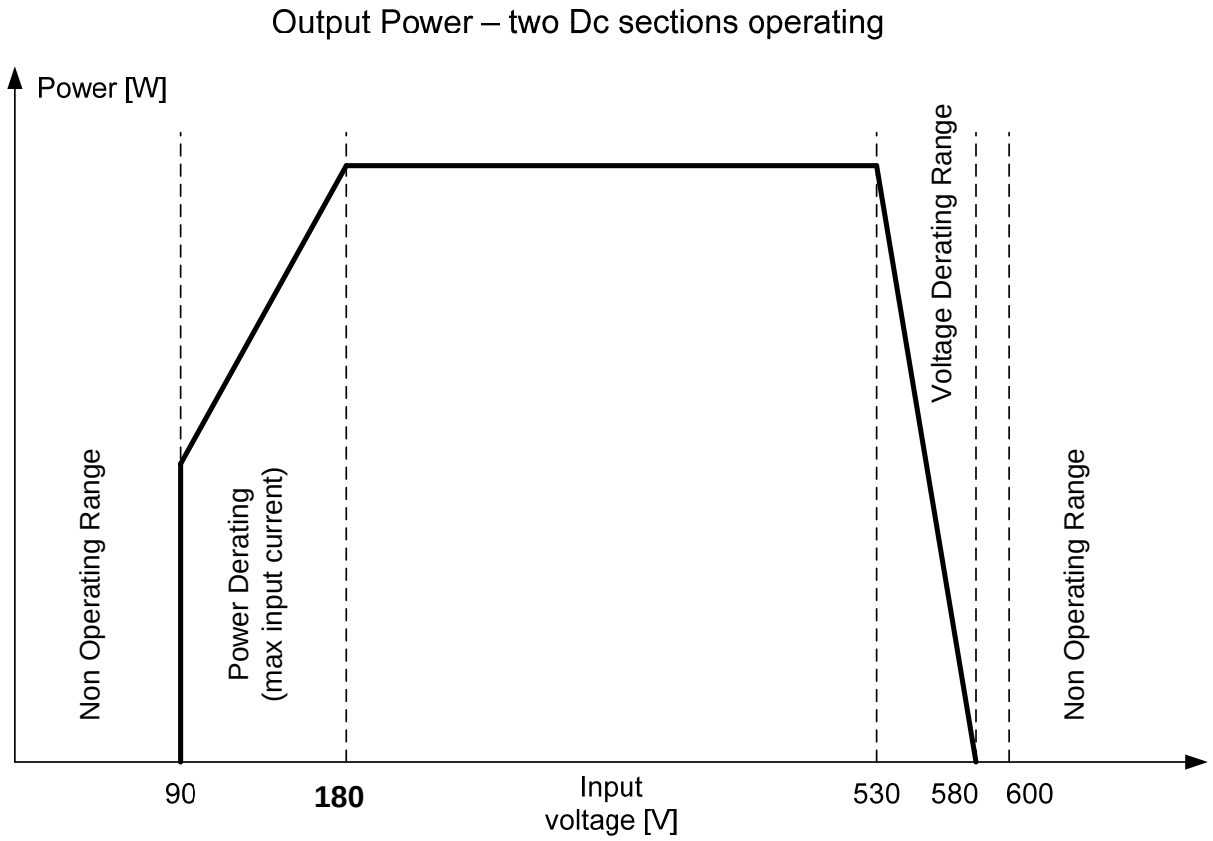
Output Power – two Dc sections operating
Power [W]
Non Operating Range
Power Derating
(max input current)
Voltage Derating Range
Non Operating Range
90
180
Input
voltage [V]
530
580
600

**Fig. 30**

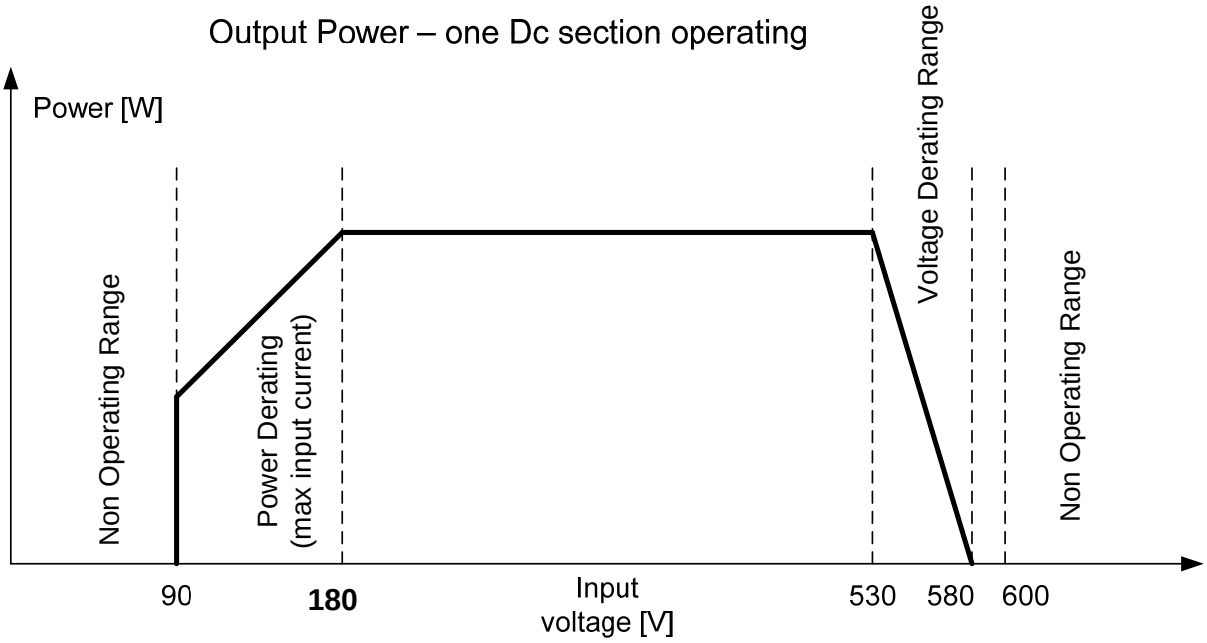


**Fig. 31**

Necessary conditions for power derating due to environmental conditions and to input voltage can occur at the same time, but in this instance power derating will always consider the lowest value detected.

CSA INTERNATIONAL

# Certificate of Compliance

| | | | |
|---|---|---|---|
| **Certificate:** | 2096477 | **Master Contract:** | 173688 |
| **Project:** | 2096477 | **Date Issued:** | 2009/03/06 |
| **Issued to:** | **Power-One, Inc**<br>**740 Calle Plano**<br>**Camarillo, CA 93012**<br>**USA**<br>**Attention: Mr. Gianfranco Iannuzzi** | | |

***The products listed below are eligible to bear the CSA Mark shown with adjacent indicators 'C' and 'US' for Canada and US or with adjacent indicator 'US' for US only or without either indicator for Canada only.***

C US

**Issued by:** Rob Hempstock, AScT.

**Authorized by:** Lindsay Clark, Product Group Manager

**PRODUCTS**

**CLASS 5311 09** - POWER SUPPLIES - Distributed Generation Power Systems Equipment
**CLASS 5311 89** - POWER SUPPLIES - Distributed Generation - Power Systems Equipment
- Certified to U.S. Standards

Utility Interactive Inverter, Models PVI-4.2-OUTD-US, PVI-3.6-OUTD-US, PVI-3.0-OUTD-US, PVI-4.2-OUTD-S-US, PVI-3.6-OUTD-S-US, PVI-3.0-OUTD-S-US, PVI-4.2-OUTD-US-W, PVI-3.6-OUTD-US-W and PVI-3.0-OUTD-US-W; provided with two DC input channels, permanently connected.

DQD 507 Rev. 2004-06-30

CSA INTERNATIONAL

| | | | |
|---|---|---|---|
| **Certificate:** | 2096477 | **Master Contract:** | 173688 |
| **Project:** | 2096477 | **Date Issued:** | 2009/03/06 |

Notes:

For details related to ratings, reference should be made to the CSA Certification Record, Appendix 1 or the Descriptive Report.

**APPLICABLE REQUIREMENTS**

CAN/CSA-C22.2 No. 0-M91 - General Requirements - Canadian Electrical Code - Part II

CAN/CSA-C22.2 No. 0.4-04 - Bonding of Electrical Equipment

CSA-C22.2 No.107.1-01 - General Use Power Supplies

UL Std No. 1741-First Edition - Inverters, Converters, Controllers and Interconnection System Equipment for Use With Distributed Energy Resources (Including Revisions through and including November 7, 2005)

DQD 507 Rev. 2004-06-30

CSA INTERNATIONAL

## *Supplement to Certificate of Compliance*

**Certificate:** 2096477 **Master Contract:** 173688

*The products listed, including the latest revision described below, are eligible to be marked in accordance with the referenced Certificate.*

**Product Certification History**

| Project | Date | Description |
|---|---|---|
| 2096477 | 2009/03/06 | Utility Interactive Inverters, PVI-4.2, PVI-3.6 and PVI-3.0 Series. (C/US) |

CSA INTERNATIONAL

# Letter of Attestation

**Document:** 2096477 **Master Contract:** 173688

**Project:** 2096477 **Date Issued:** March 6, 2009

**Issued to:** **Power-One Italy S.p.A**
**Via San Giorgio 642**
**Terranuova Bracciolini, Arezzo 52028**
**Italy**

**Attention: Mr. Gianfranco Iannuzzi**

*CSA International hereby confirms that it has completed an evaluation of Utility Interactive Inverters,*

**Models PVI-4.2-OUTD-US, PVI-3.6-OUTD-US, PVI-3.0-OUTD-US,**

**PVI-4.2-OUTD-S-US, PVI-3.6-OUTD-S-US, PVI-3.0-OUTD-S-US,**

**PVI-4.2-OUTD-US-W, PVI-3.6-OUTD-US-W and PVI-3.0-OUTD-US-W.**

*CSA International hereby attests that the products identified above and described in CSA report 2096477 complies with the following standards/tests, to the extent applicable:*

The testing of the subject inverters were completed according to the following sections of the test protocol entitled "Performance Test Protocol for Evaluating Inverters Used in Grid-Connected Photovoltaic Systems" prepared by "Sandia National Laboratories, Endecon Engineering, BEW Engineering, and Institute for Sustainable Technology", dated October 14, 2004 as modified by the "CEC Guideline for the use of the Performance Test Protocol for Evaluating Inverters Used in Grid-Connected Photovoltaic Systems - (draft for immediate use)" prepared by KEMA-Xenergy, and BEW Engineering, dated March 1, 2005 with deviations according to the requirements of the California Energy Commission New Solar Homes Partnership Guidebook 2nd edition (CEC-300-2007-008-CMF), Appendix 3, Section B – "Inverters":

- *Maximum Continuous Power*
- *Conversion Efficiency*
- *Tare Losses*

Notes:

1. Models PVI-4.2-OUTD-S-US, PVI-3.6-OUTD-S-US, and PVI-3.0-OUTD-S-US were tested as being representative of the series. Each model is available in 208V ac, 240V ac, and 277V ac outputs and each output voltage was tested.
2. Models PVI-4.2-OUTD-S-US, PVI-3.6-OUTD-S-US, and PVI-3.0-OUTD-S-US are identical to models PVI-4.2-OUTD-US, PVI-3.6-OUTD-US, and PVI-3.0-OUTD-US, except for an integrated switch box.
3. Inverter Models PVI-4.2-OUTD-US-W, PVI-3.6-OUTD-US-W and PVI-3.0-OUTD-US-W are intended for operation with Regulated Wind Generated supplies only; these inverters are intended to receive an input supply from a wind generator interface module (which converts AC voltage from a wind generator into a DC voltage).

DQD 507.06 Rev. 2006-02-23 Page 1 of 2

CSA INTERNATIONAL

**Certificate:** 2096477 **Master Contract:** 173688
**Project:** 2096477 **Date:** March 6, 2009

4. Inverter Models PVI-4.2-OUTD-US-W, PVI-3.6-OUTD-US-W and PVI-3.0-OUTD-US-W are identical in construction to models PVI-4.2-OUTD-US, PVI-3.6-OUTD-US, and PVI-3.0-OUTD-US.
5. For summary of test results refer to Attachment 1 (Model PVI-4.2-OUTD-S-US, 14 pages), Attachment 2 (Model PVI-3.6-OUTD-S-US, 14pages) and Attachment 3 (Model PVI-3.0-OUTD-S-US, 14 pages).

**Issued by:** ----------

**Rob Hempstock, AScT.**

THIS LETTER OF ATTESTATION DOES NOT AUTHORIZE THE USE OF THE CSA MARK ON THE SUBJECT PRODUCTS.
QUOTATIONS FROM THE TEST REPORT OR THE USE OF THE NAME OF THE CANADIAN STANDARDS ASSOCIATION AND CSA INTERNATIONAL OR ITS REGISTERED TRADEMARK, IN ANY WAY, IS NOT PERMITTED WITHOUT PRIOR WRITTEN CONSENT OF THE CANADIAN STANDARDS ASSOCIATION OR CSA INTERNATIONAL.

DQD 507.06 Rev. 2006-02-23 Page 2 of 2